沧州傲森迪克管件制造有限公司

CANGZHOU AUTHENTIC PIPE-FITTING MANUFACTURING CO.,LTD.

公司简介

COMPANY INTRODUCTION

沧州傲森迪克管件制造有限公司位于中国管件之都、管件制造业中心—孟村县。紧邻渤海湾和天津港，毗邻首都北京。傲森迪克公司不仅在位置上，而且在其快速发展的技术支持上也被赋予了很大的优势。

沧州傲森迪克管件制造有限公司，占地面积10万平方米，建筑面积50000平方米。公司拥有多条管件制造生产线，具有独立的压制、机加工、中频热推制、冷成型、热挤压、热处理等技术。此外，为了确保产品质量，公司越来越多的关注检验设备的改进。先进的设备，以及相应的检测能力不断被采用，如化学元素分析、金属测试、物理检查和无损检测等。另外，我们采用最先进的材料成分分析设备——直读光谱设备可以直接和准确地测试各种金属材料的化学物质组成。

我公司工业管件制造种类繁多，覆盖弯头、三通、异径管、弯管及管帽等，可以执行ASTM，ANSI，JIS，DIN，GB等标准，基本涵盖了各类钢材。生产能力已达到10000吨每年。我们深知赢得市场和客户的关键是创新和改革，所以我们一直以“使客户满意”为宗旨，时时处处处于同行业领先地位。

“诚信赢天下，合力建未来”是傲森迪克公司不变的经营方针，并建立了优质高效的管理体系。我们的产品供应石油、化工、电厂、航运、建筑、制药、造纸等行业，多年来凭借优质的产品和服务，赢得了良好的声誉。

“追求最佳品质”是傲森迪克公司永恒的主题。



傲森迪克管件
AUTHENTIC
PIPE-FITTING
诚信赢天下 合力建未来
Good faith wins the world and builds the future together

COMPANY PROFILE

Cangzhou Authentic Pipe-fitting Manufacturing Co.,Ltd. is located in manufacturing center of China pipe and pipe fittings, Mengcun county. It is close to Bohai bay and Tianjin port, adjacent to the capital, Beijing. Cangzhou Authentic Pipe-fitting Manufacturing Co.,Ltd. has also been given a great advantage not only in position but also in the rapid development of the technical support.

Cangzhou Authentic Pipe-fitting Manufacturing Co.,Ltd. Covers an area of 100,000 square meters,among them there are the building area of 50,000 square meters. The company has a number of pipe fittings manufacturing production line. Our company has an independent, pressing machine, medium frequency induction heating process, cold forming, hot extrusion and heat treatment technology. In addition, in order to ensure product quality, the company is more and more concerned about the improvement of inspection equipment. Advanced equipment, as well as the corresponding detection capabilities are constantly being used, such as chemical element analysis, metal testing, physical inspection and nondestructive testing. In addition, we have adopted the most advanced material analysis equipment, direct reading spectrometry equipment can direct and accurate testing of metal material chemical composition analysis.

Our company's industrial pipe fittings manufacturing industry are different, the covering range of elbow, tee, reducing,bend, pipe cap, can perform the ASTM, ANSI, JIS, DIN, GB, etc. which covers all kinds of steel basically. Production capacity has reached 10000 tons per year. We know is the key to win the market and customers, innovation and reform, so we have to "make customers satisfied" for the purpose, and in the same industry leading position.

"Good faith to win the world, together to build the future." is the operating principle of proud, dick company remains the same, and quality and efficient management system is established.Our products supply of petroleum, chemical industry, power plant, shipping, construction, pharmaceutical, paper making industries, over the years with the high quality products and service, has won the good reputation.

"The pursuit of the best quality" is the eternal theme of Cangzhou Authentic Pipe-fitting Manufacturing Co.,Ltd.

AUTHENTIC PIPE-FITTING
QUALIFICATION PAPER
资质证书

历程虽辉煌 但永远是万里长征第一步

Although the history of brilliant but forever is the first step in the long march

CANGZHOU AUTHENTIC PIPE-FITTING MANUFACTURING CO.,LTD.

迪傲克森







- 营业执照
  Business license
- 开户许可证
  Open bank account permit certificate
- 报关单位注册登记证
  Customs declaration registration certificate
- 出入境报检备案表
  Entry and exit inspection record
- 对外贸易备案登记表
  Registration form for foreign trade







傲森迪克管件
AUTHENTIC
PIPE-FITTING

ABS

CERTIFICATE NUMBER 23-2395518-PDA
EFFECTIVE DATE 14-May-2023
EXPIRATION DATE 13-May-2028
ABS TECHNICAL OFFICE CN Shanghai ESD

CERTIFICATE OF

Product Design Assessment

This is to certify that a representative of this Bureau did, at the request of

CANGZHOU AUTHENTIC PIPE-FITTING MANUFACTURING CO., LTD

located at

DONGHE VILLAGE, NIUJINZHUANG TOWN, MENGCUN COUNTY, CANGZHOU, HEBEI, China, 061400

assess design plans and data for the below listed product. This assessment is a representation by the Bureau as to the degree of compliance the design exhibits with applicable sections of the Rules. This assessment does not waive unit certification or classification procedures required by ABS Rules for products to be installed in ABS classed vessels or facilities. This certificate, by itself, does not reflect that the product is Type Approved. The scope and limitations of this assessment are detailed on the pages attached to this certificate.

Product **Steel Pipe Fittings**

Model **Elbow, Tee, Reducer, Cap and Flange**

Endorsement:

This Product Design Assessment (PDA) Certificate remains valid until 13/May/2028 or until the Rules and/or Standards used in the assessment are revised or until there is a design modification warranting design reassessment (whichever occurs first).

Acceptance of product is limited to the "Intended Service" details prescribed in the certificate and as per applicable Rules and Standards.

This Certificate is valid for installation of the listed product on ABS units which exist or are under contract for construction on or previous to the effective date of the ABS Rules and standards applied at the time of PDA issuance. Use of the Product for non-ABS units is subject to agreement between the manufacturer and intended client.

American Bureau of Shipping

Bin-Hong Wang, Director

NOTE: This certificate evidences compliance with one or more of the Rules, Guides, standards or other criteria of ABS or a statutory, industrial or manufacturer's standards. It is issued solely for the use of ABS, its committees, its clients or other authorized entities. Any significant changes to the aforementioned product without approval from ABS will result in this certificate becoming null and void. This certificate is governed by ABS Rules 1-1-A3/5.9 Terms and Conditions of the Request for Product Type Approval and Agreement

●ABS认证证书

ABS authentication certificate

AUTHENTIC PIPE-FITTING
QUALIFICATION PAPER
资质证书

历程虽辉煌 但永远是万里长征第一步
Although the history of brilliant but forever is the first step in the long march
CANGZHOU AUTHENTIC PIPE-FITTING MANUFACTURING CO.,LTD.

DNV

APPROVAL OF MANUFACTURER CERTIFICATE

Certificate no.:
AMMM00003AX

This is to certify:

that

Cangzhou Authentic pipe-Fitting Manufacturing Co.,Ltd.
Donghe Village Niujinzhuang town, Mengcun county,Cangzhou city, China

is an approved manufacturer of
Steel Pipes and Fittings

in accordance with

DNV rules for classification – Ships
DNV class programme – DNV-CP-0252 Steel pipes and steel pipe fittings

and the following particulars:

Product	**Pipe fittings**
Application area	**Piping fittings**
Steel type	**Carbon and carbon-manganese,** **Austenitic stainless,** **See page 2**
Manufacturing method	**Hot or cold formed seamless,** **Hot or cold finished welded**
Max. outer diameter	**See page 2**
Max. wall thickness	**See page 2**
Heat treatment condition	**See page 2**
Additional approval conditions	**See page 2**

Manufacturer(s) approved by this certificate is/are accepted to deliver according to DNV GL, DNV and GL rules.
Materials to be applied to DNV classed object shall fulfill the material requirements in the applicable DNV class rules.

Issued at Hamburg on 2025-08-12

This Certificate is valid until **2028-08-11**.
DNV local unit: **Dalian NB & CMC**

Approval Engineer: **Christian Wildhagen**

for DNV

This document has been digitally signed and will therefore not have handwritten signature

LEGAL DISCLAIMER: Unless otherwise stated in the applicable contract with the holder of this document, or following from mandatory law, the liability of DNV AS, its parent companies and their subsidiaries as well as their officers, directors and employees ("DNV") arising from or in connection with the services rendered for the purpose of the issuance of this document or reliance thereon, whether in contract or in tort (including negligence), shall be limited to direct losses and under any circumstance be limited to USD 300 000.

●DNV认证证书
DNV authentication certificate



傲森迪克管件
AUTHENTIC
PIPE-FITTING

DNV

Job ID: 263.11-013606-1
Certificate no.: AMMM00003AX

Particulars of the approval

Piping fittings (elbows, tees, reducers and caps)

Steel type /grade	Manufacturing method [1]	Max. outer diameter [mm]	Max. wall thickness [mm]	Heat treatment condition [2]
C and C-Mn	HFS / CFS	610	30	QT
	HFW / CFW	1200	20	QT
CrNi	HFS / CFS	610	30	SHT
	HFW / CFW	1200	20	SHT
CrNiMo	HFS / CFS	610	30	SHT
	HFW / CFW	1200	20	SHT

Remarks:

1) HFS: hot finished seamless; CFS: cold finished seamless
   HFW: hot finished welded; CFS: cold finished welded
2) QT: Quenched and tempered SHT: Solution Heat Treated (solution annealing)
3) Suitable pipe fittings shall be selected from the following recognized standards:
   EN 10253, ASTM A234, ASTM A403, ASTM A420, ASTM A774, ASTM A815, ASTM A960, ASTM A961, JIS B2312, JIS B2313 or JIS B2316.

● DNV认证证书

DNV authentication certificate

AUTHENTIC PIPE-FITTING
QUALIFICATION PAPER
资质证书

历程虽辉煌 但永远是万里长征第一步
Although the history of brilliant but forever is the first step in the long march
CANGZHOU AUTHENTIC PIPE-FITTING MANUFACTURING CO.,LTD.

ЕВРАЗИЙСКИЙ ЭКОНОМИЧЕСКИЙ СОЮЗ
ДЕКЛАРАЦИЯ О СООТВЕТСТВИИ

EAC

Заявитель Общество с ограниченной ответственностью "УСПЕХ"

Место нахождения и адрес места осуществления деятельности: Россия, Московская область, 141065, город Королёв, улица Горького, дом 79, корпус 2, квартира 96, основной государственный регистрационный номер: 1205000039530, номер телефона: +79639625170, адрес электронной почты: tajmahal88@mail.ru

в лице Генерального директора Поправко Алексея Борисовича

заявляет, что Арматура промышленная трубопроводная: Фитинги, тип: 1/2"-48"

изготовитель «Cangzhou Authentic Pipe-fitting Manufacturing Co.,Ltd.». Место нахождения и адрес места осуществления деятельности по изготовлению продукции: Китай, Donghe Industrial Zone, Mengcun, Cangzhou, Hebei,China.
Код ТН ВЭД ЕАЭС 7307939900, 730729100. Серийный выпуск

соответствует требованиям

Технического регламента Таможенного союза "О безопасности оборудования, работающего под избыточным давлением" (ТР ТС 032/2013)

Декларация о соответствии принята на основании

Протокола испытаний № АТР/072023/38386 от 17.04.2023 года, выданного Испытательной лабораторией Общества с ограниченной ответственностью «ПЦИ «Атриум», аттестат аккредитации № РОСС RU.32001.04ИБФ1.ИЛ27.
Схема декларирования 1д

Дополнительная информация

Условия и сроки хранения стандартные при нормальных значениях климатических факторов внешней среды, срок службы (годности) указан в эксплуатационной документации.

Декларация о соответствии действительна с даты регистрации по 16.04.2028 включительно

М. П. "УСПЕХ"

(подпись) Поправко Алексей Борисович
(Ф.И.О. заявителя)

Регистрационный номер декларации о соответствии: ЕАЭС N RU Д-CN.PA03.B.26657/23

Дата регистрации декларации о соответствии: 17.04.2023

●EAC认证证书
EAC authentication certificate



傲森迪克管件
AUTHENTIC
PIPE-FITTING

ЕВРАЗИЙСКИЙ ЭКОНОМИЧЕСКИЙ СОЮЗ
ДЕКЛАРАЦИЯ О СООТВЕТСТВИИ

EAC

Заявитель Общество с ограниченной ответственностью "УСПЕХ"

Место нахождения и адрес места осуществления деятельности: Россия, Московская область, 141065, город Королёв, улица Горького, дом 79, корпус 2, квартира 96, основной государственный регистрационный номер: 1205000039530, номер телефона: +79639625170, адрес электронной почты: tajmahal88@mail.ru

в лице Генерального директора Поправко Алексея Борисовича

заявляет, что Арматура промышленная трубопроводная: Фланцы, тип: DN15mm-DN3000mm

изготовитель «Cangzhou Authentic Pipe-fitting Manufacturing Co.,Ltd.». Место нахождения и адрес места осуществления деятельности по изготовлению продукции: Китай, Donghe Industrial Zone, Mengcun, Cangzhou, Hebei,China.
Код ТН ВЭД ЕАЭС 7307910000. Серийный выпуск

соответствует требованиям

Технического регламента Таможенного союза "О безопасности оборудования, работающего под избыточным давлением" (ТР ТС 032/2013)

Декларация о соответствии принята на основании

Протокола испытаний № АТР/072023/38387 от 17.04.2023 года, выданного Испытательной лабораторией Общества с ограниченной ответственностью «ПЦИ «Атриум», аттестат аккредитации № РОСС RU.32001.04ИБФ1.ИЛ27.
Схема декларирования 1д

Дополнительная информация

Условия и сроки хранения стандартные при нормальных значениях климатических факторов внешней среды, срок службы (годности) указан в эксплуатационной документации.

Декларация о соответствии действительна с даты регистрации по 16.04.2028 включительно

(подпись) М.П. Поправко Алексей Борисович
(Ф.И.О. заявителя)

Регистрационный номер декларации о соответствии: ЕАЭС N RU Д-CN.PA03.B.26659/23

Дата регистрации декларации о соответствии: 17.04.2023

●EAC认证证书
EAC authentication certificate



傲森迪克管件
AUTHENTIC
PIPE-FITTING

API American Petroleum Institute

REGISTRATION NO. Q1-3060

Certificate of Registration

The American Petroleum Institute certifies that the quality management system of

CANGZHOU AUTHENTIC PIPE-FITTING MANUFACTURING CO.,LTD.
Donghe Village, Niujinzhuang Town
Mengcun Hui Autonomous County
Cangzhou, Hebei Province
People's Republic of China

has been assessed by the American Petroleum Institute and found to be in conformance with the following:

API Spec Q1, 10th Edition

The scope of this registration and the approved quality management system applies to the
Manufacture of Pipe Fittings

API approves the organization's justification for excluding
Design

Effective Date: **OCTOBER 21, 2025**
Expiration Date: **APRIL 30, 2028**
Registered Since: **OCTOBER 28, 2016**

Q1 API Spec Q1 Registered ®

Senior Vice President of Global Industry Services

This certificate is valid for the period specified herein. The registered organization must continually meet all requirements of API Spec Q1, *Specification for Quality Management System Requirements for Manufacturing Organizations for the Petroleum and Natural Gas Industry*, and the requirements of the Registration Agreement. Registration is maintained and regularly monitored through annual full system audits. This certificate has been issued from API offices located at 200 Massachusetts Avenue, NW Suite 1100, Washington, DC 20001-5571, U.S.A. It is the property of API and must be returned upon request. **To verify the authenticity of this certificate, go to www.api.org/compositelist.**

2021-164 | 11.21 | Digital

●API认证证书

API authentication certificate

AUTHENTIC PIPE-FITTING
QUALIFICATION PAPER
资质证书

历程虽辉煌 但永远是万里长征第一步
Although the history of brilliant but forever is the first step in the long march
CANGZHOU AUTHENTIC PIPE-FITTING MANUFACTURING CO.,LTD.

ЕВРАЗИЙСКИЙ ЭКОНОМИЧЕСКИЙ СОЮЗ
ДЕКЛАРАЦИЯ О СООТВЕТСТВИИ

EAC

Заявитель Общество с ограниченной ответственностью "УСПЕХ"

Место нахождения и адрес места осуществления деятельности: Россия, Московская область, 141065, город Королёв, улица Горького, дом 79, корпус 2, квартира 96, основной государственный регистрационный номер: 1205000039530, номер телефона: +79639625170, адрес электронной почты: tajmahal88@mail.ru

в лице Генерального директора Поправко Алексея Борисовича

заявляет, что Арматура промышленная трубопроводная: стальные трубы, тип: 1/2"-48"

изготовитель «Cangzhou Authentic Pipe-fitting Manufacturing Co.,Ltd.». Место нахождения и адрес места осуществления деятельности по изготовлению продукции: Китай, Donghe Industrial Zone, Mengcun, Cangzhou, Hebei,China.
Код ТН ВЭД ЕАЭС 7304399300, 730419100. Серийный выпуск

соответствует требованиям

Технического регламента Таможенного союза "О безопасности оборудования, работающего под избыточным давлением" (ТР ТС 032/2013)

Декларация о соответствии принята на основании

Протокола испытаний № АТР/072023/38385 от 17.04.2023 года, выданного Испытательной лабораторией Общества с ограниченной ответственностью «ПЦИ «Атриум», аттестат аккредитации № РОСС RU.32001.04ИБФ1.ИЛ27.
Схема декларирования 1д

Дополнительная информация

Условия и сроки хранения стандартные при нормальных значениях климатических факторов внешней среды, срок службы (годности) указан в эксплуатационной документации.

Декларация о соответствии действительна с даты регистрации по 16.04.2028 включительно

(подпись) М. П. Поправко Алексей Борисович
(Ф.И.О. заявителя)

Регистрационный номер декларации о соответствии: ЕАЭС N RU Д-CN.PA03.B.26654/23

Дата регистрации декларации о соответствии: 17.04.2023

●EAC认证证书
EAC authentication certificate



傲森迪克管件
AUTHENTIC
PIPE-FITTING

API American Petroleum Institute

REGISTRATION NO. Q1-3060

Certificate of Registration

The American Petroleum Institute certifies that the quality management system of

CANGZHOU AUTHENTIC PIPE-FITTING MANUFACTURING CO.,LTD.
Donghe Village, Niujinzhuang Town
Mengcun Hui Autonomous County
Cangzhou, Hebei Province
People's Republic of China

has been assessed by the American Petroleum Institute and found to be in conformance with the following:

API Spec Q1, 9th Edition

The scope of this registration and the approved quality management system applies to the

Manufacture of Pipe Fittings

API approves the organization's justification for excluding
Design and Development; Servicing

API Spec Q1 Registered ®

Effective Date: **APRIL 30, 2022**
Expiration Date: **APRIL 30, 2025**
Registered Since: **OCTOBER 28, 2016**

Senior Vice President of Global Industry Services

This certificate is valid for the period specified herein. The registered organization must continually meet all requirements of API Spec Q1, *Specification for Quality Management System Requirements for Manufacturing Organizations for the Petroleum and Natural Gas Industry*, and the requirements of the Registration Agreement. Registration is maintained and regularly monitored through annual full system audits. This certificate has been issued from API offices located at 200 Massachusetts Avenue, NW Suite 1100, Washington, DC 20001-5571, U.S.A. It is the property of API and must be returned upon request. **To verify the authenticity of this certificate, go to www.api.org/compositelist.**

2021-164 | 11.21 | Digital

●API认证证书
API authentication certificate

AUTHENTIC PIPE-FITTING
QUALIFICATION PAPER
资质证书

历程虽辉煌 但永远是万里长征第一步
Although the history of brilliant but forever is the first step in the long march
CANGZHOU AUTHENTIC PIPE-FITTING MANUFACTURING CO.,LTD.

认证证书

标准	**ISO 9001:2015**
证书登记号码	**01 100 1533062**
证书持有者：	**沧州傲森迪克管件制造有限公司** 统一社会信用代码：91130930056504419G 注册地址：中华人民共和国河北省沧州市 孟村回族自治县牛进庄乡东河村 邮编：061400 经营地址：中华人民共和国河北省沧州市 孟村回族自治县牛进庄乡东河工业区 邮编：061400
认证范围：	无缝钢制管件的生产和销售
	证明完成了审核并满足了 ISO 9001:2015 标准的要求。
有效期：	证书有效期从 2025-03-14 至 2028-01-25。 此证书须经过符合要求的监督审核保持有效。 初次发证始于 2016 年 本证书信息可在国家认证认可监督管理委员会官方网站上查询 http://www.cnca.gov.cn

2025-03-18

TÜV Rheinland Cert GmbH
Am Grauen Stein · 51105 Köln

行政办公室：莱茵检测认证服务（中国）有限公司，北京市北京经济技术开发区荣华南路 15 号院 4 号楼 3 层 301 室、12 层 1203 室（北京自贸试验区高端产业片区亦庄组团），100176

® TÜV, TUEV and TUV are registered trademarks. Utilisation and application requires prior approval.

www.tuv.com

IAF

DAkkS Deutsche Akkreditierungsstelle D-ZM-16031-01-00

TÜVRheinland®
Precisely Right.

●9001证书
9001 Certificate



傲森迪克管件
AUTHENTIC
PIPE-FITTING

Certificate

Standard **ISO 9001:2015**

Certificate Registr. No. **01 100 1533062**

Certificate Holder: **Cangzhou Authentic Pipe-fitting Manufacturing Co., Ltd.**
Unified Social Credit Code: 91130930056504419G
Registration Address: Donghe Village, Niujinzhuang Town, Mengcun County, Cangzhou City, 061400 Hebei, P. R. China
Operation Address: Donghe Industrial Zone, Niujinzhuang Town, Mengcun County, Cangzhou City, 061400 Hebei, P. R. China

Scope: Manufacturing and Sales of Seamless Steel Pipe Fittings

Proof has been furnished by means of an audit that the requirements of ISO 9001:2015 are met.

Validity: The certificate is valid from 2025-03-14 until 2028-01-25.
It remains valid subject to satisfactory surveillance audits.
First certification 2016
This certificate information can be searched on CNCA official website http://www.cnca.gov.cn

2025-03-18

TÜV Rheinland Cert GmbH
Am Grauen Stein · 51105 Köln

Administrative office:TÜV Rheinland China Ltd., Room 301, 3F and Room 1203, 12F, Building 4, No.15, Ronghua South Road, Beijing Economic-Technological Development Area, Beijing (Yizhuang group in high-end industrial area of Beijing Pilot Free Trade Zone), 100176, P. R. China

® TÜV, TUEV and TUV are registered trademarks. Utilisation and application requires prior approval.

www.tuv.com

IAF

DAkkS Deutsche Akkreditierungsstelle D-ZM-16031-01-00

TÜVRheinland®
Precisely Right.

●9001证书
9001 Certificate

AUTHENTIC PIPE-FITTING
QUALIFICATION PAPER
资质证书

历程虽辉煌 但永远是万里长征第一步
Although the history of brilliant but forever is the first step in the long march
CANGZHOU AUTHENTIC PIPE-FITTING MANUFACTURING CO.,LTD.

Certificate

Quality management system for Manufacturer of Materials acc. to Directive 2014/68/EU

Certificate no.: 01 202 CHN/Q-16 0586.01

Name and address of the certificate holder:
Cangzhou Authentic Pipe-fitting Manufacturing Co., Ltd.
Donghe Industrial Zone, Niujinzhuang Town,
Mengcun Couty, Cangzhou City,
061400 Hebei
P.R. China

Herewith we certify that the material manufacturer has established and applies a Quality Management System. The system was audited according to the European Directive 2014/68/EU, Annex I, point 4.3, with regard to the materials as listed in the scope of approval.

Test basis: **QM System acc. to EN 764-5, Clause 4.2 and AD 2000-Merkblatt W0**

Audit report no.: 01 202 CHN/Q-16 0586

Scope: **Manufacturing of seamless steel pipe fittings, welded pipe fittings and steel forgings, see annex to certificate: 01 202 CHN/Q-16 0586, revision 4 from Dec 20, 2024**

Manufacturing plant: see certificate holder

Validity: **The certificate is valid until 2028-01-23.**

Cologne, 2025-03-21

Ines Krüger-Fuhr

TÜV Rheinland Industrie Service GmbH
Notified Body for Pressure Equipment, ID-No. 0035
Am Grauen Stein, D-51105 Cologne

E-108a

© TÜV, TUEV und TUV sind eingetragene Marken. Eine Nutzung und Verwendung bedarf der vorherigen Zustimmung.

www.tuv.com

TÜVRheinland®
Precisely Right.

●PED证书
PED Certificate

PED证书 PED Certificate

Annex to Certificate No. : 01 202 CHN/Q-16 0586

TÜVRheinland®

Scope:	☒ Directive 2014/68/EU Annex I point 4.3	☐ EN 764-4	☐ AD 2000-Merkblatt W 0

Certificate holder (Manufacturer of materials)		Manufacturing plant	Nationality	Page No.:	1	
Company Name:	Cangzhou Authentic Pipe-fitting Manufacturing Co.,Ltd.	Same as left	China	of :	3	TÜV Rheinland
Location:	Donghe Industrial Zone, Niujinzhuang Town, Mengcun County, Cangzhou City, Hebei Province, 061400, P. R. China.			Date:	Dec 20, 2024	Industrie Service GmbH
				Rev.:	4	

Cur -	Materials-term Materials-No.	Material Specification	Delivery Cond.	Article Type of Product	Dimensions Thick-ness mm from	Dimensions Thick-ness mm Up to	Dimensions ∅ mm from	Dimensions ∅ mm Up to	Weight max 1=t / 2=kg ⇓	Weight max result	Technical Specifications Requirements Technical Regulations	Remarks
1	2	3	4	5	6a	6b	7a	7b	8a	8b	9	10
1. Materials according to harmonized European standards (hEN) and European Approval for Materials (EAM) acc. Directive 2014/68/EU												
The use of the materials according to Directive 2014/68/EU is bound to the publication of Harmonized European Standards or to the qualification by a European material approval or to the particular material appraisal. With that the manufacturing reliability for equivalent material grades according to other standards (e.g. BS, AFNOR, ASME) is proved. The requirements and limits of the applicable code respectively the PED must be observed for the use of material grades listed in column 2 to 4.												
1	P355N, P235TR2, P265GH	EN 10253-2	+N	Seamless pipe fitting	1,65	60	21	1016	1	3.6	EN 10253-2	
2	P235GH	EN 10253-2	+N	Seamless pipe fitting	3	60	21	1016	1	3.6	EN 10253-2	
3	P235TR2, P235GH, P265TR2 P265GH, P355N, P355NH	EN 10253-2	+N	Welded pipe fitting	3	35	108	1620	1	5.2	EN 10253-2	
4	1.4301, 1.4306, 1.4401 1.4404, 1.4541	EN 10253-4	+AT	Seamless pipe fitting	2	60	21	1820	1	4	EN 10253-4	
5	1.4301, 1.4306, 1.4401 1.4404, 1.4541	EN 10253-4	+AT	Welded pipe fitting	3	40	21	1820	1	6	EN 10253-4	

Remarks					
	+AT = solution annealed	+NT =	normalized and tempered	a =	PMA for the use in pressure equipment in Directive 2014/68/EU neccessary
	+AR = as rolled	+QT =	quenched and tempered		
	+M = thermo mechanical treated	+S =	soft annealed		
	+N = normalized or normalizing formed	+SR =	stress relieved		

傲森迪克管件 AUTHENTIC PIPE-FITTING



Annex to Certificate No. : 01 202 CHN/Q-16 0586

TÜVRheinland®

Scope:	☐ Directive 2014/68/EU Annex I point 4.3	☐ EN 764-4	☒ AD 2000-Merkblatt W 0

Certificate holder (Manufacturer of materials)		Manufacturing plant	Nationality	Page No.:	2	
Company Name:	Cangzhou Authentic Pipe-fitting Manufacturing Co.,Ltd.	Same as left	China	of :	3	TÜV Rheinland
Location:	Donghe Industrial Zone, Niujinzhuang Town, Mengcun County, Cangzhou City, Hebei Province, 061400, P. R. China.			Date:	Dec 20, 2024	Industrie Service GmbH
				Rev.:	4	

Cur -	Materials-term Materials-No.	Material Specification	Delivery Cond.	Article Type of Product	Dimensions Thick-ness mm from	Thick-ness mm Up to	⌀ mm from	⌀ mm Up to	Weight max 1=t / 2=kg ⇓	Weight max result	Technical Specifications Requirements Technical Regulations	Remarks
1	2	3	4	5	6a	6b	7a	7b	8a	8b	9	10
2. Materials according to the AD 2000-Code												
The use of the materials according to DGR 2014/68/EU is bound to the publication of Harmonized European Standards or to the qualification by a European material approval or to the particular material appraisal. With that the manufacturing reliability for equivalent material grades according to other standards (e.g. BS, AFNOR, ASME) is proved. The requirements and limits of the applicable code respectively the PED must be observed for the use of material grades listed in column 2 to 4.												
1	S235JR	EN 10025-2	+N	Flanges cut from plates and manufactured by machining	12	100	10	1200	1	0.4	AD 2000 W9	1. The plates only from AD2000-W1 approved manufacturers. 2. The plates shall be subjected to non-destructive testing by the manufacturer in accordance with DIN EN 10160, requirements for quality class S2 3. The inspection documents for the plates shall be provided in accordance with AD 2000-W1

Remarks					
	+AT = solution annealed	+NT = normalized and tempered	a = PMA for the use in pressure equipment in Directive 2014/68/EU neccessary
	+AR = as rolled	+QT = quenched and tempered	
	+M = thermo mechanical treated	+S = soft annealed	
	+N = normalized or normalizing formed	+SR = stress relieved	

Annex to Certificate No. : 01 202 CHN/Q-16 0586

TÜVRheinland®

Scope:	☒ Directive 2014/68/EU Annex I point 4.3	☐ EN 764-4	☐ AD 2000-Merkblatt W 0

Certificate holder (Manufacturer of materials)		Manufacturing plant	Nationality	Page No.:	3	
Company Name:	Cangzhou Authentic Pipe-fitting Manufacturing Co.,Ltd.	Same as left	China	of :	3	TÜV Rheinland
Location:	Donghe Industrial Zone, Niujinzhuang Town, Mengcun County, Cangzhou City, Hebei Province, 061400, P. R. China.			Date:	Dec 20, 2024	Industrie Service
				Rev.:	4	GmbH

Cur -	Materials-term Materials-No.	Material Specification	Delivery Cond.	Article Type of Product	Dimensions Thick-ness mm from	Thick-ness mm Up to	∅ mm from	∅ mm Up to	Weight max 1=t / 2=kg ⇓	Weight max 1=t / 2=kg result	Technical Specifications Requirements Technical Regulations	Remarks
1	2	3	4	5	6a	6b	7a	7b	8a	8b	9	10
3. Materials according to other standards												
The use of the materials according to DGR 2014/68/EU is bound to the publication of Harmonized European Standards or to the qualification by a European material approval or to the particular material appraisal. With that the manufacturing reliability for equivalent material grades according to other standards (e.g. BS, AFNOR, ASME) is proved. The requirements and limits of the applicable code respectively the PED must be observed for the use of material grades listed in column 2 to 4.												
1	WPB	ASTM A234	+N	Seamless pipe fitting	1.65	60	21	1016	1	3.6	ASTM A234 ASME B16.9	a
2	WPB	ASTM A234	+N	Welded pipe fitting	3	35	108	1620	1	5.2	ASTM A234 ASME B16.9	a
3	WP304, WP304L, WP316, WP316L, WP321	ASTM A403	+AT	Seamless pipe fitting	2	60	21	1820	1	4	ASTM A403 ASME B16.9	a
4	WP304, WP304L, WP316, WP316L, WP321	ASTM A403	+AT	Welded pipe fitting	3	40	21	1820	1	6	ASTM A403 ASME B16.9	a
5	S235JR	EN 10025-2	+N	Flanges cut from plates and manufactured by machining	12	100	10	1200	1	0.4	EN 10025-2	1. a 2. For plates, only can from PED 2014/68/EU approved manufacturers, and EN10204-3.1 certification is required.

Remarks					
	+AT = solution annealed	+NT = normalized and tempered	a = PMA for the use in pressure equipment in Directive 2014/68/EU neccessary
	+AR = as rolled	+QT = quenched and tempered	
	+M = thermo mechanical treated	+S = soft annealed	
	+N = normalized or normalizing formed	+SR = stress relieved	

● PED证书
PED Certificate

傲森迪克管件
AUTHENTIC
PIPE-FITTING



AUTHENTIC PIPE-FITTING
QUALIFICATION PAPER
资质证书

历程虽辉煌 但永远是万里长征第一步
Although the history of brilliant but forever is the first step in the long march
CANGZHOU AUTHENTIC PIPE-FITTING MANUFACTURING CO.,LTD.

ДОБРОВОЛЬНАЯ СЕРТИФИКАЦИЯ ПРОДУКЦИИ

СЕРТИФИКАТ СООТВЕТСТВИЯ

№ РОСС CN.АЖ49.Н06020

Срок действия с 19.08.2024 по 18.08.2027

№ 0122412

ОРГАН ПО СЕРТИФИКАЦИИ

рег.№ RA.RU.11АЖ49, Орган по сертификации "Апекс-сертификация" Общества с ограниченной ответственностью "Апекс", 115193, Россия, город Москва, улица Петра Романова, дом 7, строение 1, помещение 3/5, Тел: +7(499)444-36-34, E-mail: info@apex-cert.ru

ПРОДУКЦИЯ

90 LR Колено, 90 SR Колено , 45 LR Колено, 45 SR Колено, Тройник, Колпачок трубы ,Концентрический переход ,Эксцентрический переход из нержавеющей стали DN15-1200
Серийный выпуск

код ОК
Код ОК 034-2014 (КПЕС 2008) 24.20.40

СООТВЕТСТВУЕТ ТРЕБОВАНИЯМ НОРМАТИВНЫХ ДОКУМЕНТОВ

Соответствует документации изготовителя

код ТН ВЭД
7307290000

ИЗГОТОВИТЕЛЬ

«Cangzhou Authentic Pipe-Fitting Manufacturing Co.,Ltd.»
Место нахождения: Китай, Donghe industrial zone,Cangzhou city, Hebei province,P.R,China

СЕРТИФИКАТ ВЫДАН

«Cangzhou Authentic Pipe-Fitting Manufacturing Co.,Ltd.»
Место нахождения: Китай, Donghe industrial zone,Cangzhou city, Hebei province,P.R,China

НА ОСНОВАНИИ

Протокола испытаний № КПА22-39213 от 19.08.2024 года, выданного Испытательной лабораторией «Качество Продукции» (аттестат аккредитации РОСС RU.31881.04ТЕСО.ИЛ024)

ДОПОЛНИТЕЛЬНАЯ ИНФОРМАЦИЯ

Схема сертификации: 1с.

Руководитель органа — подпись — Колосов Роман Борисович (инициалы, фамилия)

Эксперт — подпись — (инициалы, фамилия)

Сертификат не применяется при обязательной сертификации

● GOST证书
GOST Certificate



傲森迪克管件
AUTHENTIC
PIPE-FITTING

ДОБРОВОЛЬНАЯ СЕРТИФИКАЦИЯ ПРОДУКЦИИ

СЕРТИФИКАТ СООТВЕТСТВИЯ

№ РОСС CN.АЖ49.Н06021

Срок действия с 19.08.2024 по 18.08.2027

№ 0122413

ОРГАН ПО СЕРТИФИКАЦИИ

рег.№ RA.RU.11АЖ49, Орган по сертификации "Апекс-сертификация" Общества с ограниченной ответственностью "Апекс", 115193, Россия, город Москва, улица Петра Романова, дом 7, строение 1, помещение 3/5, Тел: +7(499)444-36-34, E-mail: info@apex-cert.ru

ПРОДУКЦИЯ

Кузнечный фланец DN15-3000
Серийный выпуск

код ОК
Код ОК 034-2014 (КПЕС 2008) 24.20.40

код ТН ВЭД
7307910000

СООТВЕТСТВУЕТ ТРЕБОВАНИЯМ НОРМАТИВНЫХ ДОКУМЕНТОВ

Соответствует документации изготовителя

ИЗГОТОВИТЕЛЬ

«Cangzhou Authentic Pipe-Fitting Manufacturing Co.,Ltd.»
Место нахождения: Китай, Donghe industrial zone,Cangzhou city, Hebei province,P.R,China

СЕРТИФИКАТ ВЫДАН

«Cangzhou Authentic Pipe-Fitting Manufacturing Co.,Ltd.»
Место нахождения: Китай, Donghe industrial zone,Cangzhou city, Hebei province,P.R,China

НА ОСНОВАНИИ

Протокола испытаний № КПА22-39212 от 19.08.2024 года, выданного Испытательной лабораторией «Качество Продукции» (аттестат аккредитации РОСС RU.31881.04ТЕСО.ИЛ024)

ДОПОЛНИТЕЛЬНАЯ ИНФОРМАЦИЯ

Схема сертификации: 1с.

М.П.

Руководитель органа — подпись — Колосов Роман Борисович (инициалы, фамилия)

Эксперт — подпись — Николаев Александр Степанович (инициалы, фамилия)

Сертификат не применяется при обязательной сертификации

●GOST证书
GOST Certificate

AUTHENTIC PIPE-FITTING
QUALIFICATION PAPER
资质证书

历程虽辉煌 但永远是万里长征第一步
Although the history of brilliant but forever is the first step in the long march
CANGZHOU AUTHENTIC PIPE-FITTING MANUFACTURING CO.,LTD.

TMZC50139549D01T210702

第 50139549 号

商 标 注 册 证

核定使用商品/服务项目（国际分类：6）

第6类： 钢管；钢合金；金属垫圈；金属井盖；五金器具；金属法兰盘；管道用金属弯头；压缩空气管道用金属配件；管道金属弯头（包括钢钛合金制）；存储和运输用金属容器（截止）

注 册 人 沧州傲森迪克管件制造有限公司

注册人地址 河北省沧州市孟村回族自治县牛进庄乡东河村

注册日期 2021年06月07日 **有效期至** 2031年06月06日

局 长 申长雨 **发证机关** 国家知识产权局

● 商标注册证
Trademark Registration Certificate



傲森迪克管件
AUTHENTIC
PIPE-FITTING

ДОБРОВОЛЬНАЯ СЕРТИФИКАЦИЯ ПРОДУКЦИИ

СЕРТИФИКАТ СООТВЕТСТВИЯ

№ РОСС CN.АЖ49.Н06019

Срок действия с 19.08.2024 по 18.08.2027

№ 0122411

ОРГАН ПО СЕРТИФИКАЦИИ

рег.№ RA.RU.11АЖ49, Орган по сертификации "Апекс-сертификация" Общества с ограниченной ответственностью "Апекс", 115193, Россия, город Москва, улица Петра Романова, дом 7, строение 1, помещение 3/5, Тел: +7(499)444-36-34, E-mail: info@apex-cert.ru

ПРОДУКЦИЯ

90 LR Колено, 90 SR Колено , 45 LR Колено, 45 SR Колено, Тройник, Колпачок трубы ,Концентрический переход ,Эксцентрический переход из нержавеющей стали DN15-1200
Серийный выпуск

код ОК
Код ОК 034-2014 (КПЕС 2008) 24.20.40

код ТН ВЭД
7307290000

СООТВЕТСТВУЕТ ТРЕБОВАНИЯМ НОРМАТИВНЫХ ДОКУМЕНТОВ

Соответствует документации изготовителя

ИЗГОТОВИТЕЛЬ

«Cangzhou Authentic Pipe-Fitting Manufacturing Co.,Ltd.»
Место нахождения: Китай, Donghe industrial zone,Cangzhou city, Hebei province,P.R,China

СЕРТИФИКАТ ВЫДАН

«Cangzhou Authentic Pipe-Fitting Manufacturing Co.,Ltd.»
Место нахождения: Китай, Donghe industrial zone,Cangzhou city, Hebei province,P.R,China

НА ОСНОВАНИИ

Протокола испытаний № КПА22-39214 от 19.08.2024 года, выданного Испытательной лабораторией «Качество Продукции» (аттестат аккредитации РОСС RU.31881.04ТЕСО.ИЛ024)

ДОПОЛНИТЕЛЬНАЯ ИНФОРМАЦИЯ

Схема сертификации: 1с.

М.П.

Руководитель органа _____ (подпись) Колосов Роман Борисович (инициалы, фамилия)

Эксперт _____ (подпись) Николаев Александр Степанович (инициалы, фамилия)

Сертификат не применяется при обязательной сертификации

● GOST证书
GOST Certificate

AUTHENTIC PIPE-FITTING
QUALIFICATION PAPER
资质证书

历程虽辉煌 但永远是万里长征第一步
Although the history of brilliant but forever is the first step in the long march
CANGZHOU AUTHENTIC PIPE-FITTING MANUFACTURING CO.,LTD.

中华人民共和国
特种设备生产许可证
Production License of Special Equipment
People's Republic of China

编号： TS2713515-2026

单位名称： 沧州傲森迪克管件制造有限公司

住　　所： 孟村回族自治县牛进庄乡东河村

制造地址： 河北省沧州市孟村回族自治县牛进庄乡东河村

经审查，获准从事以下特种设备生产活动：

许可项目	许可子项目	许可参数	备注
压力管道元件制造	压力管道管件（无缝管件B1、B2）、（有缝管件B1、B2）	—	具体产品范围见型式试验证书
	压力管道管件（锻制管件）	—	
	压力管道法兰（钢制锻造法兰）	—	

发证机关： 河北省市场监督管理局

有效期至： 2026年10月14日

公章：河北省市场监督管理局

2022年10月21日

变更日期： 2024年04月09日

● 特种设备生产许可证
Special Equipment Production License



傲森迪克管件
AUTHENTIC
PIPE-FITTING

副 本

中华人民共和国
特种设备生产许可证

Production License of Special Equipment
People's Republic of China

编号： TS2713515-2026

单位名称： 沧州傲森迪克管件制造有限公司

住　　所： 孟村回族自治县牛进庄乡东河村

制造地址： 河北省沧州市孟村回族自治县牛进庄乡东河村

经审查，获准从事以下特种设备生产活动：

许可项目	许可子项目	许可参数	备注
压力管道元件制造	压力管道管件（无缝管件B1、B2）、（有缝管件B1、B2）	—	具体产品范围见型式试验证书
	压力管道管件（锻制管件）	—	
	压力管道法兰（钢制锻造法兰）	—	

发证机关： 河北省市场监督管理局

有效期至： 2026年10月14日

公章：河北省市场监督管理局 2022年10月21日

变更日期： 2024年04月09日

● 特种设备生产许可证
Special Equipment Production License

AUTHENTIC PIPE-FITTING
QUALIFICATION PAPER
资质证书

历程虽辉煌 但永远是万里长征第一步
Although the history of brilliant but forever is the first step in the long march
CANGZHOU AUTHENTIC PIPE-FITTING MANUFACTURING CO.,LTD.

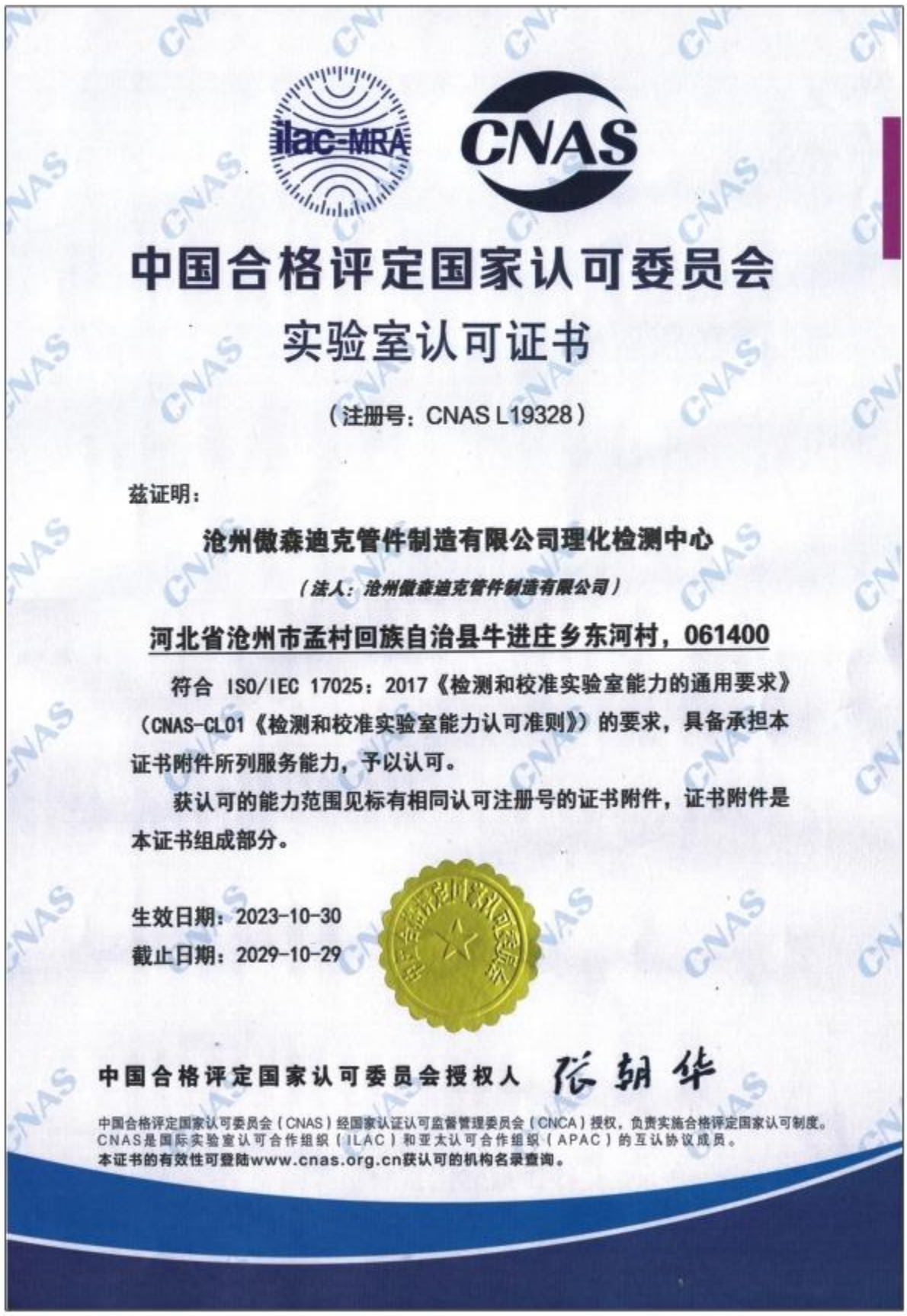

中国合格评定国家认可委员会

实验室认可证书

（注册号：CNAS L19328）

兹证明：

沧州傲森迪克管件制造有限公司理化检测中心

（法人：沧州傲森迪克管件制造有限公司）

河北省沧州市孟村回族自治县牛进庄乡东河村，061400

符合 ISO/IEC 17025：2017《检测和校准实验室能力的通用要求》（CNAS-CL01《检测和校准实验室能力认可准则》）的要求，具备承担本证书附件所列服务能力，予以认可。

获认可的能力范围见标有相同认可注册号的证书附件，证书附件是本证书组成部分。

生效日期：2023-10-30

截止日期：2029-10-29

中国合格评定国家认可委员会授权人 张朝华

中国合格评定国家认可委员会（CNAS）经国家认证认可监督管理委员会（CNCA）授权，负责实施合格评定国家认可制度。
CNAS是国际实验室认可合作组织（ILAC）和亚太认可合作组织（APAC）的互认协议成员。
本证书的有效性可登陆www.cnas.org.cn获认可的机构名录查询。

●CNAS实验室认可证书
CNAS Laboratory Accreditation Certificate



傲森迪克管件
AUTHENTIC
PIPE-FITTING

China National Accreditation Service for Conformity Assessment

LABORATORY ACCREDITATION CERTIFICATE

(Registration No. CNAS L19328)

Physical and Chemical Testing Center of Cangzhou Authentic Pipe Fitting Manufacturing Co., Ltd.

(Legal Entity: Cangzhou Authentic Pipe Fitting Manufacturing Co., Ltd.)

Donghe Industrial Zone, Niujinzhuang, Mengcun Hui Autonomous County, Cangzhou, Hebei, China

is accredited in accordance with ISO/IEC 17025: 2017 General Requirements for the Competence of Testing and Calibration Laboratories(CNAS-CL01 Accreditation Criteria for the Competence of Testing and Calibration Laboratories) for the competence to undertake the service described in the schedule attached to this certificate.

The scope of accreditation is detailed in the attached schedule bearing the same registration number as above. The schedule forms an integral part of this certificate.

Effective Date：2023-10-30

Expiry Date：2029-10-29

Signed on behalf of China National Accreditation Service for Conformity Assessment 张朝华

China National Accreditation Service for Conformity Assessment (CNAS) is authorized by Certification and Accreditation Administration of the People's Republic of China (CNCA) to operate the national accreditation schemes for conformity assessment. CNAS is a signatory of the International Laboratory Accreditation Cooperation Mutual Recognition Arrangement (ILAC MRA) and the Asia Pacific Accreditation Cooperation Mutual Recognition Arrangement (APAC MRA).

The validity of the certificate can be checked on CNAS website at http://www.cnas.org.cn/english/findanaccreditedbody/index.shtml.

●CNAS实验室认可证书

CNAS Laboratory Accreditation Certificate

AUTHENTIC PIPE-FITTING
QUALIFICATION PAPER
资质证书

历程虽辉煌 但永远是万里长征第一步
Although the history of brilliant but forever is the first step in the long march
CANGZHOU AUTHENTIC PIPE-FITTING MANUFACTURING CO.,LTD.



●HSE管理体系证书
HSE Management System Certificate



傲森迪克管件
AUTHENTIC
PIPE-FITTING

CQM
China Quality Mark

HSE Management System Evaluation Certificate

Certificate Number:HSE20240054

CQM hereby certifies that

Cangzhou Authentic Pip-fitting Manufacturing Co., Ltd.

Unified Social Credit Identifier: 91130930056504419G
Domicile:Donghe Village, Niujinzhuang Township, Mengcun Hui Autonomous County, Cangzhou City, Hebei, P.R.China
Certification Add.:Donghe Village, Niujinzhuang Township, Mengcun Hui Autonomous County, Cangzhou City, Hebei, P.R.China

the management system conform to
Q/SHS 0001.1-2001
Q/SY 1002.1-2013

This certificate is valid to the following scope:

Production of seamless pipe fittings (B1, B2) and forged pipe fittings, sales of flanges

China Quality Mark

(The information of this certificate can be inquired on www.cnca.gov.cn or website of CQM. The continual validity of the certificate can be checked by Certificate Confirmation of surveillance.)

Issued on: 2024-12-12
Expires on: 2028-01-25

签发人：

Member of
IQNET

方圆标志认证集团
China Quality Mark Certification Group

CHINA QUALITY MARK

G 0000664

●HSE管理体系证书
HSE Management System Certificate

AUTHENTIC PIPE-FITTING
QUALIFICATION PAPER
资质证书

历程虽辉煌 但永远是万里长征第一步
Although the history of brilliant but forever is the first step in the long march
CANGZHOU AUTHENTIC PIPE-FITTING MANUFACTURING CO.,LTD.



CQM
China Quality Mark

职业健康安全管理体系认证证书

证书编号：00224S24919R1M

兹证明

沧州傲森迪克管件制造有限公司

统一社会信用代码:911309300565044196
住所:河北省沧州市孟村回族自治县牛进庄乡东河村
认证地址:河北省沧州市孟村回族自治县牛进庄乡东河村

管理体系符合
GB/T 45001-2020/ISO 45001:2018

覆盖的范围

无缝管件（B1、B2）、锻制管件的生产，法兰的销售

China Quality Mark

（本证书信息可在国家认证认可监督管理委员会官方网站 www.cnca.gov.cn 或方圆标志认证集团官方网站 [illegible]。年度监督[illegible]（确认证书）用以证实本证书的持续有效性。）

生效日期：2024 年 12 月 12 日
有效期至：2028 年 01 月 25 日

签发人：

中国认可
国际互认
管理体系
MANAGEMENT SYSTEM
CNAS C002-M

Member of
IQNET

方圆标志认证集团
China Quality Mark Certification Group

CHINA QUALITY MARK

AA 0133302

●职业健康安全管理体系证书
Occupational Health and Safety Management System Certificate



傲森迪克管件
AUTHENTIC
PIPE-FITTING

CQM
China Quality Mark

Occupational Health and Safety Management System Certificate

Certificate Number:00224S24919R1M

CQM hereby certifies that

Cangzhou Authentic Pip-fitting Manufacturing Co., Ltd.

Unified Social Credit Identifier: 911309300565044196

Domicile:Donghe Village, Niujinzhuang Township, Mengcun Hui Autonomous County, Cangzhou City, Hebei, P.R.China
Certification Add.:Donghe Village, Niujinzhuang Township, Mengcun Hui Autonomous County, Cangzhou City, Hebei, P.R.China

the management system conform to
GB/T 45001-2020/ISO 45001:2018

This certificate is valid to the following scope:

Production of seamless pipe fittings (B1, B2) and forged pipe fittings, sales of flanges

China Quality Mark

(The information of this certificate can be inquired on www.cnca.gov.cn or website of CQM. The continual validity of the certificate will be checked by Certificate Confirmation of surveillance.)

Issued on: 2024-12-12
Expires on: 2028-01-25

签发人：

中国认可
国际互认
管理体系
MANAGEMENT SYSTEM
CNAS C002-M

Member of IQNET

方圆标志认证集团
China Quality Mark Certification Group

CHINA QUALITY MARK

AA 0133301

● 职业健康安全管理体系证书

Occupational Health and Safety Management System Certificate

AUTHENTIC PIPE-FITTING
QUALIFICATION PAPER
资质证书

历程虽辉煌 但永远是万里长征第一步
Although the history of brilliant but forever is the first step in the long march
CANGZHOU AUTHENTIC PIPE-FITTING MANUFACTURING CO.,LTD.



CQM
China Quality Mark

环境管理体系认证证书

证书编号：00224E35374R1M

兹证明

沧州傲森迪克管件制造有限公司

统一社会信用代码:911309300565044190
住所:河北省沧州市孟村回族自治县牛进庄乡东河村
认证地址:河北省沧州市孟村回族自治县牛进庄乡东河村

管理体系符合
GB/T 24001-2016/ISO 14001:2015

覆盖的范围

无缝管件（B1、B2）、锻制管件的生产，法兰的销售

China Quality Mark

（本证书信息可在国家认证认可监督管理委员会官方网站 www.cnca.gov.cn 或方圆标志认证集团官方网站上查询。年度监督审核的《确认证书》用以证实本证书的持续有效性。）

生效日期：2024 年 12 月 12 日
有效期至：2028 年 01 月 25 日

签发人：

中国认可
国际互认
管理体系
MANAGEMENT SYSTEM
CNAS C002-M

Member of
IQNET

方圆标志认证集团
China Quality Mark Certification Group

CHINA QUALITY MARK

AA 0133300

●环境管理体系证书
Environmental Management System Certificate



傲森迪克管件
AUTHENTIC
PIPE-FITTING

CQM
China Quality Mark

Environmental Management System Certificate

Certificate Number:00224E35374R1M

CQM hereby certifies that

Cangzhou Authentic Pip-fitting Manufacturing Co., Ltd.

Unified Social Credit Identifier: 91130930056504419G

Domicile:Donghe Village, Niujinzhuang Township, Mengcun Hui Autonomous County, Cangzhou City, Hebei, P.R.China

Certification Add.:Donghe Village, Niujinzhuang Township, Mengcun Hui Autonomous County, Cangzhou City, Hebei, P.R.China

the management system conform to

GB/T 24001-2016/ISO 14001:2015

This certificate is valid to the following scope:

Production of seamless pipe fittings (B1, B2) and forged pipe fittings, sales of flanges

China Quality Mark

(The information of this certificate can be inquired on www.cnca.gov.cn or website of CQM. The continual validity of the certificate can be checked by Certificate Confirmation of surveillance.)

Issued on: 2024-12-12
Expires on: 2028-01-25

签发人：

IAF CNAS 中国认可 国际互认 管理体系 MANAGEMENT SYSTEM CNAS C002-M CQM Member of IQNET

方圆标志认证集团
China Quality Mark Certification Group

CHINA QUALITY MARK

Address: No.33, Zongguang Road, Haidian District, Beijing, P.R. China

AA 0133299

● 环境管理体系证书

Environmental Management System Certificate

AUTHENTIC PIPE-FITTING
QUALIFICATION PAPER
资质证书

历程虽辉煌 但永远是万里长征第一步
Although the history of brilliant but forever is the first step in the long march
CANGZHOU AUTHENTIC PIPE-FITTING MANUFACTURING CO.,LTD.



● 高新技术企业证书
High Tech Enterprise Certificate



● 河北省科技型中小企业证书
Hebei Province Science and Technology Small and Medium Enterprise Certificate



傲森迪克管件
AUTHENTIC
PIPE-FITTING



证书号第11750613号

实用新型专利证书

实用新型名称：管道加工用抛光机

发 明 人：卜洪升

专 利 号：ZL 2020 2 0423225.9

专利申请日：2020年03月29日

专 利 权 人：沧州傲森迪克管件制造有限公司

地 址：061000 河北省沧州市孟村回族自治县牛进庄乡东河村

授权公告日：2020年10月27日 授权公告号：CN 211760308 U

国家知识产权局依照中华人民共和国专利法经过初步审查，决定授予专利权，颁发实用新型专利证书并在专利登记簿上予以登记。专利权自授权公告之日起生效。专利权期限为十年，自申请日起算。

专利证书记载专利权登记时的法律状况。专利权的转移、质押、无效、终止、恢复和专利权人的姓名或名称、国籍、地址变更等事项记载在专利登记簿上。

局长
申长雨

2020年10月27日

第 1 页(共 2 页)

其他事项参见续页



证书号第11266101号

实用新型专利证书

实用新型名称：法兰盘加工车床

发 明 人：卜洪升

专 利 号：ZL 2020 2 0423227.8

专利申请日：2020年03月29日

专 利 权 人：沧州傲森迪克管件制造有限公司

地 址：061000 河北省沧州市孟村回族自治县牛进庄乡东河村

授权公告日：2020年10月27日 授权公告号：CN 211758667 U

国家知识产权局依照中华人民共和国专利法经过初步审查，决定授予专利权，颁发实用新型专利证书并在专利登记簿上予以登记。专利权自授权公告之日起生效。专利权期限为十年，自申请日起算。

专利证书记载专利权登记时的法律状况。专利权的转移、质押、无效、终止、恢复和专利权人的姓名或名称、国籍、地址变更等事项记载在专利登记簿上。

局长
申长雨

2020年10月27日

第 1 页(共 2 页)

其他事项参见续页



证书号第11751644号

实用新型专利证书

实用新型名称：管道加工三通机

发 明 人：卜洪升

专 利 号：ZL 2020 2 0423228.6

专利申请日：2020年03月29日

专 利 权 人：沧州傲森迪克管件制造有限公司

地 址：061000 河北省沧州市孟村回族自治县牛进庄乡东河村

授权公告日：2020年10月27日 授权公告号：CN 211760296 U

国家知识产权局依照中华人民共和国专利法经过初步审查，决定授予专利权，颁发实用新型专利证书并在专利登记簿上予以登记。专利权自授权公告之日起生效。专利权期限为十年，自申请日起算。

专利证书记载专利权登记时的法律状况。专利权的转移、质押、无效、终止、恢复和专利权人的姓名或名称、国籍、地址变更等事项记载在专利登记簿上。

局长
申长雨

2020年10月27日

第 1 页(共 2 页)

其他事项参见续页

● 实用新型专利证书

Utility Model Patent Certificate

AUTHENTIC PIPE-FITTING
QUALIFICATION PAPER
资质证书

历程虽辉煌 但永远是万里长征第一步
Although the history of brilliant but forever is the first step in the long march
CANGZHOU AUTHENTIC PIPE-FITTING MANUFACTURING CO.,LTD.

IQNET

Building trust together.

Certificate

CQM has issued an IQNET recognized certificate that the organization:

Cangzhou Authentic Pip-fitting Manufacturing Co., Ltd.

Donghe Village, Niujinzhuang Township, Mengcun Hui Autonomous County, Cangzhou City, Hebei, P.R.China

has implemented and maintains a

Environmental Management System

for the following scope:

Production of seamless pipe fittings (B1, B2) and forged pipe fittings, sales of flanges

which fulfils the requirements of the following standard:

ISO 14001:2015

Issued on: 2024-12-12
Expires on: 2028-01-25

Registration Number: CN-00224E35374R1M

Alex Stoichitoiu
President of IQNET

Ji XiaoDong
President of CQM

CQM China Quality Mark

This attestation is directly linked to the IQNET Member's original certificate and shall not be used as a stand-alone document.

IQNET Members*:
AENOR Spain **AFNOR Certification** France **APCER** Portugal **CCC** Cyprus **CISQ** Italy **CQC** China **CQM** China **CQS** Czech Republic **Cro Cert** Croatia **DQS Holding GmbH** Germany **EAGLE Certification Group** USA **FCAV** Brazil **FONDONORMA** Venezuela **ICONTEC** Colombia **ICS** Bosnia and Herzegovina **INTECO** Costa Rica **IRAM** Argentina **JQA** Japan **KFQ** Korea **LSQA** Uruguay **MIRTEC** Greece **MSZT** Hungary **Nemko AS** Norway **NSAI** Ireland **NYCE** México **PCBC** Poland **Quality Austria** Austria **SII** Israel **SIQ** Slovenia **SIRIM QAS International** Malaysia **SQS** Switzerland **SRAC** Romania **TSE** Türkiye **YUQS** Serbia

* The list of IQNET Members is valid at the time of issue of this certificate. Updated information is available under www.iqnet-certification.com

●ISO14001证书
ISO14001 Certificate



傲森迪克管件
AUTHENTIC
PIPE-FITTING

IQNET

Building trust together.

Certificate

CQM has issued an IQNET recognized certificate that the organization:

Cangzhou Authentic Pip-fitting Manufacturing Co., Ltd.

Donghe Village, Niujinzhuang Township, Mengcun Hui Autonomous County, Cangzhou City, Hebei, P.R.China

has implemented and maintains a

Occupational Health and Safety Management System

for the following scope:

Production of seamless pipe fittings (B1, B2) and forged pipe fittings, sales of flanges

which fulfils the requirements of the following standard:

ISO 45001:2018

Issued on: 2024-12-12
Expires on: 2028-01-25

Registration Number: CN-00224S24919R1M

Alex Stoichitoiu
President of IQNET

Ji XiaoDong
President of CQM

CQM
China Quality Mark

This attestation is directly linked to the IQNET Member's original certificate and shall not be used as a stand-alone document.

IQNET Members*:
AENOR Spain **AFNOR Certification** France **APCER** Portugal **CCC** Cyprus **CISQ** Italy **CQC** China **CQM** China **CQS** Czech Republic **Cro Cert** Croatia **DQS Holding GmbH** Germany **EAGLE Certification Group** USA **FCAV** Brazil **FONDONORMA** Venezuela **ICONTEC** Colombia **ICS** Bosnia and Herzegovina **INTECO** Costa Rica **IRAM** Argentina **JQA** Japan **KFQ** Korea **LSQA** Uruguay **MIRTEC** Greece **MSZT** Hungary **Nemko AS** Norway **NSAI** Ireland **NYCE** México **PCBC** Poland **Quality Austria** Austria **SII** Israel **SIQ** Slovenia **SIRIM QAS International** Malaysia **SQS** Switzerland **SRAC** Romania **TSE** Türkiye **YUQS** Serbia

* The list of IQNET Members is valid at the time of issue of this certificate. Updated information is available under www.iqnet-certification.com

●ISO45001证书
ISO45001 Certificate

AUTHENTIC PIPE-FITTING
QUALIFICATION PAPER
资质证书

历程虽辉煌 但永远是万里长征第一步
Although the history of brilliant but forever is the first step in the long march
CANGZHOU AUTHENTIC PIPE-FITTING MANUFACTURING CO.,LTD.



SEATONE

产品碳足迹证书

证书编号：STQC-PCF-20240024

山东世通国际认证有限公司根据相关核查程序发布本证书，
对如下内容的真实性和有效性予以证明：

产品名称：法兰和管件

申请人名称及地址：沧州傲森迪克管件制造有限公司
孟村回族自治县牛进庄乡东河村

生产企业名称地址：沧州傲森迪克管件制造有限公司
孟村回族自治县牛进庄乡东河村

数据时间边界：2023 年 1 月 1 日至 2023 年 12 月 31 日
核查依据标准及规则：ISO 14067:2018 产品的碳足迹-量化和沟通的要求和指南
PAS 2050-2011 商品和服务在生命周期内的温室气体排放评价规范
功能单位：1 吨法兰和管件
功能单位产品碳足迹：2.116 吨二氧化碳当量
系统边界：摇篮到大门

产品各阶段碳排放比例：

原辅材料（含包装物）获取阶段占 99.48%，产品生产阶段占 0.52%

山东世通国际认证有限公司

总经理签字

发证日期：2024 年 5 月 21 日
有效期至：2027 年 5 月 20 日

山东世通国际认证有限公司

微信证书查询

地址：中国·山东省青岛市高新区竹园路 2 号　电话：400-675-8617　网址：www.seatone.sas.cn

●产品碳足迹证书
Product Carbon Footprint Certificate



傲森迪克管件
AUTHENTIC
PIPE-FITTING

PRODUCT CARBON FOOTPRINT CERTIFICATE

NO. STQC-PCF-20240024

Shandong seatone international certification co.,ltd. issues this certificate in accordance with relevant verification procedures,The authenticity and validity of the following contents are proved

PRODUCT NAME: Flanges and pipe fittings

APPLICANT NAME AND ADDRESS:

CANGZHOU AUTHENTIC PIPE-FITTING MANUFACTURING CO., LTD.

Donghe Village, Niujinzhuang Town, Mengcun Hui Autonomous County, Cangzhou City, Hebei Province, China

BUSINESS NAME AND ADDRESS:

CANGZHOU AUTHENTIC PIPE-FITTING MANUFACTURING CO., LTD.

Donghe Village, Niujinzhuang Town, Mengcun Hui Autonomous County, Cangzhou City, Hebei Province, China

DATA TIME BOUNDARY: From January 1, 2023 to December 31, 2023

VERIFICATION STANDARDS AND RULES:

ISO 14067: 2018 Carbon footprint of products - requirements and guidelines for quantification and communication

PAS 2050:2011 Specifications for the assessment of greenhouse gas emissions of goods and services over the life cycle

FUNCTIONAL UNIT: 1 ton flanges and pipe fittings

FUNCTIONAL UNIT PRODUCT CARBON FOOTPRINT: 2.116 tons of carbon dioxide equivalent

SYSTEM BOUNDARY: Cradle to gate

CARBON EMISSION RATIO OF EACH STAGE OF PRODUCT:

The acquisition stage of raw and auxiliary materials (including packaging) accounted for 99.48%, and the production stage accounted for 0.52%

Signature of general manager:

S.p.chua

SHANDONG SEATONE INTERNATIONAL CERTIFICATION CO.,LTD.

Date of issue: May 21, 2024

Term of validity: May 20, 2027

Address: NO.2 Zhuyuan Road, High-tech Zone, Qingdao City, China

Tel: 400-675-8617 Web: www.seatone.net.cn

Wechat certificate query

● 产品碳足迹证书

Product Carbon Footprint Certificate

AUTHENTIC PIPE-FITTING
QUALIFICATION PAPER
资质证书

历程虽辉煌 但永远是万里长征第一步
Although the history of brilliant but forever is the first step in the long march
CANGZHOU AUTHENTIC PIPE-FITTING MANUFACTURING CO.,LTD.

PP

The American Society of Mechanical Engineers

CERTIFICATE OF AUTHORIZATION

The named company is authorized by The American Society of Mechanical Engineers (ASME) for the scope of activity shown below in accordance with the applicable rules of the ASME Boiler and Pressure Vessel Code. The use of the ASME Single Certification Mark and the authority granted by this Certificate of Authorization are subject to the provisions of the agreement set forth in the application. Any construction stamped with the ASME Single Certification Mark shall have been built strictly in accordance with the provisions of the ASME Boiler and Pressure Vessel Code.

COMPANY:

Cangzhou Authentic Pipe-fitting Manufacturing Co., Ltd.
Donghe Village, Niujinzhuang Town, Mengcun Hui Autonomous County
Cangzhou City, Hebei Province 061400
People's Republic of China

SCOPE:

Fabrication and assembly of pressure piping at the above location only

AUTHORIZED: **May 02, 2024**

EXPIRES: **May 02, 2027**

CERTIFICATE NUMBER: **61560**

Board Chair,
Conformity Assessment

Senior Director,
Engineering Operations

● 美国机械工程协会ASME “PP” 证书
ASME "PP" certificate from the American Society of Mechanical Engineers



傲森迪克管件
AUTHENTIC
PIPE-FITTING



● 河北省创新型中小企业
Innovative small and medium-sized enterprises in Hebei Province

AUTHENTIC PIPE-FITTING
QUALIFICATION PAPER
资质证书

历程虽辉煌 但永远是万里长征第一步
Although the history of brilliant but forever is the first step in the long march
CANGZHOU AUTHENTIC PIPE-FITTING MANUFACTURING CO.,LTD.


国家安全生产监督管理总局
STATE ADMINISTRATION OF WORK SAFETY

安全生产标准化
Work Safety Standardization

证 书
CERTIFICATE

证书编号：冀 AQBJXIII 202404467

沧州傲森迪克管件制造有限公司

安全生产标准化三级企业

（机械）

有效期至：2027 年 2 月 28 日

沧州市应急管理局（章）

2024 年 2 月 29 日

国家安全生产监督管理总局监制
State Administration of Work Safety

● 安全生产标准化证书
Safety Production Standardization Certificate

安全生产诚信等级证书
Safety Production Integrity Level Certificate

河北省安全生产委员会办公室
Office of Safety Production Committee of Hebei Province

企业名称：沧州傲森迪克管件制造有限公司

评定等级：B级

河北省企业安全生产诚信

等级证书

（副 本）

所属行业：机械

证书编号：HBCX91130930056504419G01

发证机关：孟村回族自治县应急管理局

河北省安全生产委员会监制

有 效 期：2023年08月20日至2025年08月19日

傲森迪克管件
AUTHENTIC
PIPE-FITTING



产品展示
PRODUCT DISPLAY



大口径推制弯头 Large-diameter push-type Elbow

傲森迪克管件
AUTHENTIC
PIPE-FITTING
诚信赢天下 合力建未来
Good faith wins the world and builds the future together

弯头 Elbow

弯头生产范围

外径：1/2″ ~ 60″
壁厚：4mm ~ 200mm
弯曲半径：R=1D ~ 10D
产品角度：30° 45° 60° 90° 180°

ELBOW

OD：1/2″ ~ 60″
THICKNESS：4mm ~ 200mm
BENDING RADIUS: R=1D ~ 10D
ANGLE: 30° 45° 60° 90° 180°





沧州傲森迪克管件制造有限公司

CANGZHOU AUTHENTIC PIPE-FITTING MANUFACTURING CO.,LTD.



90° 弯头（长）
L/R 90° ELBOW



90° 弯头（短）
S/R 90° ELBOW



45° 弯头（长）
L/R 45° ELBOW



45° 弯头（短）
S/R 45° ELBOW



180° 弯头（长）
L/R 180° ELBOW



180° 弯头（短）
S/R 180° ELBOW



镀锌弯头(长)
L/R 90°
GALVANIZED ELBOW



不锈钢弯头（长）
L/R 90°
STAINLESS STEEL ELBOW



不锈钢弯头（短）
S/R 90°
STAINLESS STEEL ELBOW



等径三通
Straight Tee



异径三通
Reducing Tee



不锈钢等径三通
Stainless steel Straight Tee



不锈钢异径三通
Stainless steel Reducing Tee



同心异径管
Con Reducer



偏心异径管
Ecc Reducer



不锈钢同心异径管
Stainless steel Con Reducer



不锈钢偏心异径管
Stainless steel Ecc Reducer



管帽
Cap



封头
Head



不锈钢管帽
Stainless steel Cap



不锈钢封头
Stainless steel Head

傲森迪克管件
AUTHENTIC
PIPE-FITTING
诚信赢天下 合力建未来
Good faith wins the world and builds the future together

产品展示
PRODUCT DISPLAY

弯头 Elbow







沧州傲森迪克管件制造有限公司

CANGZHOU AUTHENTIC PIPE-FITTING MANUFACTURING CO.,LTD.

弯管 Bend

弯管生产范围

外径：1/2″ ~ 60″
壁厚：4mm ~ 200mm
弯曲半径：R=3D ~ 10D
产品角度：0° ~ 180°

Bend

OD: 1/2″ ~ 60″
THICKNESS: 4mm ~ 200mm
BENDING RADIUS: R=3D ~ 10D
ANGLE: 0° ~ 180°



产品展示 PRODUCT DISPLAY



合金弯管 Alloy bend



复合金属弯管 Composite metal bend

傲森迪克管件
AUTHENTIC
PIPE-FITTING
诚信赢天下 合力建未来
Good faith wins the world and builds the future together

产品展示
PRODUCT DISPLAY

弯管 Bend







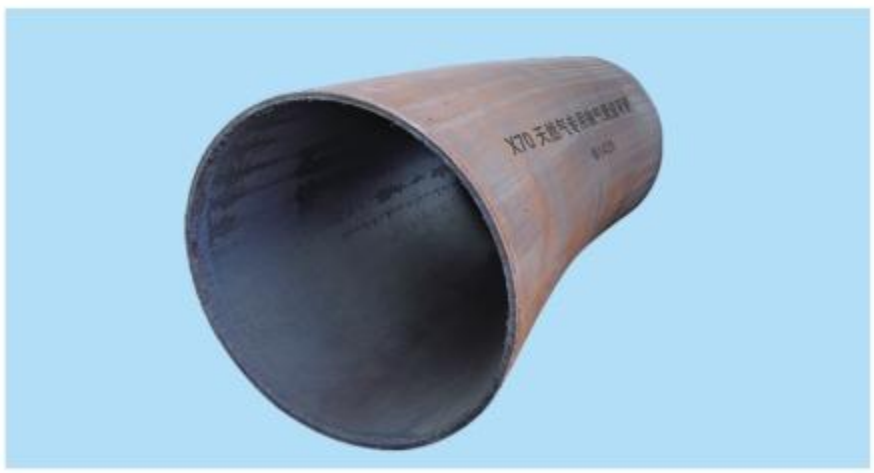



沧州傲森迪克管件制造有限公司

CANGZHOU AUTHENTIC PIPE-FITTING MANUFACTURING CO.,LTD.

产品展示

PRODUCT DISPLAY

三通 Tee





傲森迪克管件
AUTHENTIC
PIPE-FITTING
诚信赢天下 合力建未来
Good faith wins the world and builds the future together

三通 Tee

三通生产范围

外径：1/2" ~ 60"

壁厚：4mm ~ 200mm

产品类型：等径三通、异径三通

Tee

OD: 1/2" ~ 60"

THICKNESS: 4mm ~ 200mm

PATTERN: STRAIGHT TEE, REDUCING TEE

高压锻制三通 High pressure forging tee





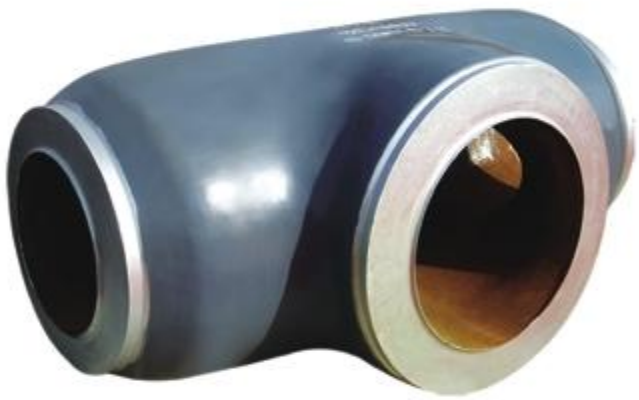



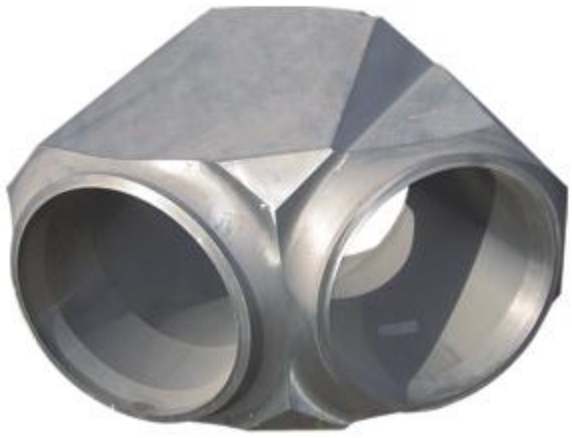



沧州傲森迪克管件制造有限公司

CANGZHOU AUTHENTIC PIPE-FITTING MANUFACTURING CO.,LTD.

法兰 FLANGE

整体法兰生产范围

外径：3/8″ ~80″
压力：PN2.5bar~PN400bar、CLASS150~CLASS2500
密封面类型：平面 突面 凹凸面 榫槽面 环连接面

IF FLANGE

OD:3/8″ ~80″
NOMINAL PRESSURE:
PN2.5bar~PN400bar、CLASS150~CLASS2500
SURFACE: FF, RF, MFM,TG, RJ

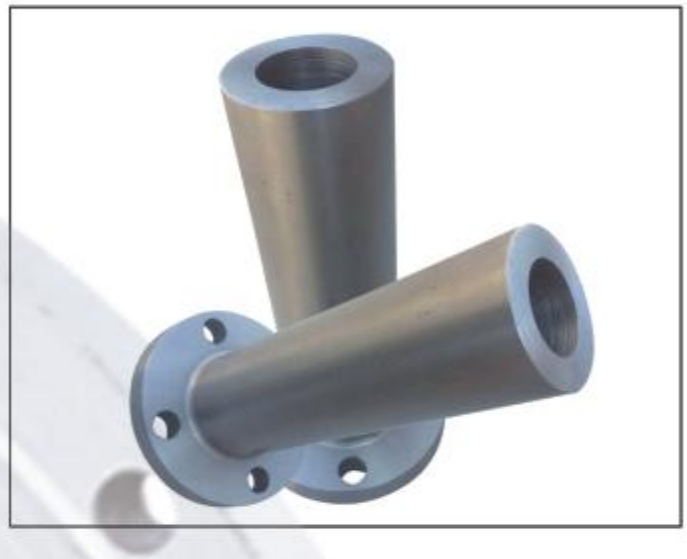

对焊法兰生产范围

外径：3/8″ ~160″
压力：PN2.5bar~PN400bar、CLASS150~CLASS2500
密封面类型：平面 突面 凹凸面 榫槽面 环连接面

BW FLANGE

OD:3/8″ ~160″
NOMINAL PRESSURE:
PN2.5bar~PN400bar、CLASS150~CLASS2500
SURFACE: FF, RF, MFM,TG, RJ



板式平焊法兰生产范围

外径：3/8″ ~80″
压力：PN2.5bar~PN100bar
密封面类型：平面 突面

PL FLANGE

OD: 3/8″ ~80″
NOMINAL PRESSURE: PN2.5bar~PN100bar
SURFACE: FF、RF

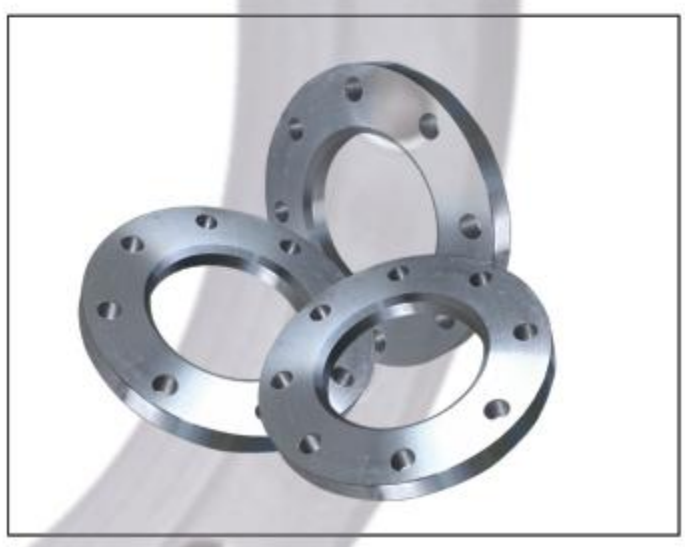

傲森迪克管件
AUTHENTIC
PIPE-FITTING
诚信赢天下 合力建未来
Good faith wins the world and builds the future together

产品展示
PRODUCT DISPLAY

带颈平焊法兰生产范围
外径：3/8″ ~40″
压力：PN6bar~PN100bar、CLASS150~CLASS1500
密封面类型：平面 突面 凹凸面 榫槽面 环连接面

SO FLANGE
OD:3/8″ ~40″
NOMINAL PRESSURE:
PN6bar~PN100bar、CLASS150~CLASS1500
SURFACE: FF, RF, MFM,TG, RJ



螺纹法兰生产范围
外径：3/8″ ~40″
压力：PN6bar~PN100bar、CLASS150~CLASS2500
密封面类型：平面 突面

TH FLANGE
OD: 3/8″ ~40″
NOMINAL PRESSURE:
PN6bar~PN100bar、CLASS150~CLASS2500
SURFACE: FF、RF



承插焊法兰生产范围
外径：3/8″ ~3″
压力：PN10bar~PN100bar、CLASS150~CLASS1500
密封面类型： 突面 凹凸面 榫槽面 环连接面

SW FLANGE
OD: 3/8″ ~30″
NOMINAL PRESSURE:
PN10bar~PN100bar、CLASS150~CLASS1500
SURFACE: RF, MFM, TG, RJ



沧州傲森迪克管件制造有限公司

CANGZHOU AUTHENTIC PIPE-FITTING MANUFACTURING CO.,LTD.

法兰 FLANGE

法兰盖生产范围

外径：3/8″ ~80″

压力：PN2.5bar~PN100bar、CLASS150~CLASS1500

密封面类型： 突面 凹凸面 榫槽面 环连接面

BL FLANGE

OD: 3/8″ ~80″

NOMINAL PRESSURE:

PN2.5bar~PN100bar、CLASS150~CLASS1500

SURFACE: FF，RF, MFM, TG, RJ



松套法兰 LOOSE PLATE FLANGE



八字盲板 SPECTACLE BLANK



孔板法兰 ORIFICE FLANGE

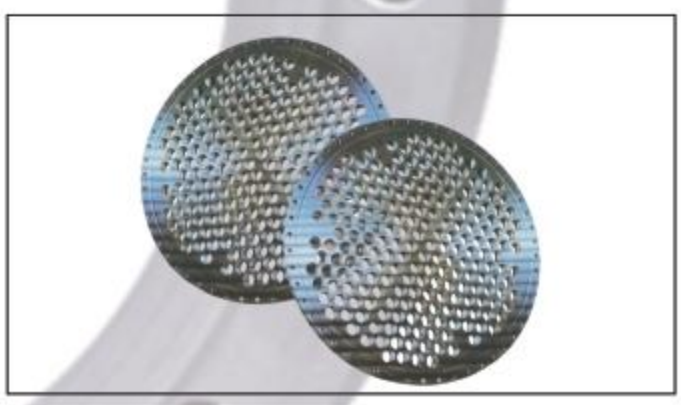

产品展示
PRODUCT DISPLAY

沧州傲森迪克管件制造有限公司

CANGZHOU AUTHENTIC PIPE-FITTING MANUFACTURING CO.,LTD.

法兰 FLANGE

产品展示 PRODUCT DISPLAY





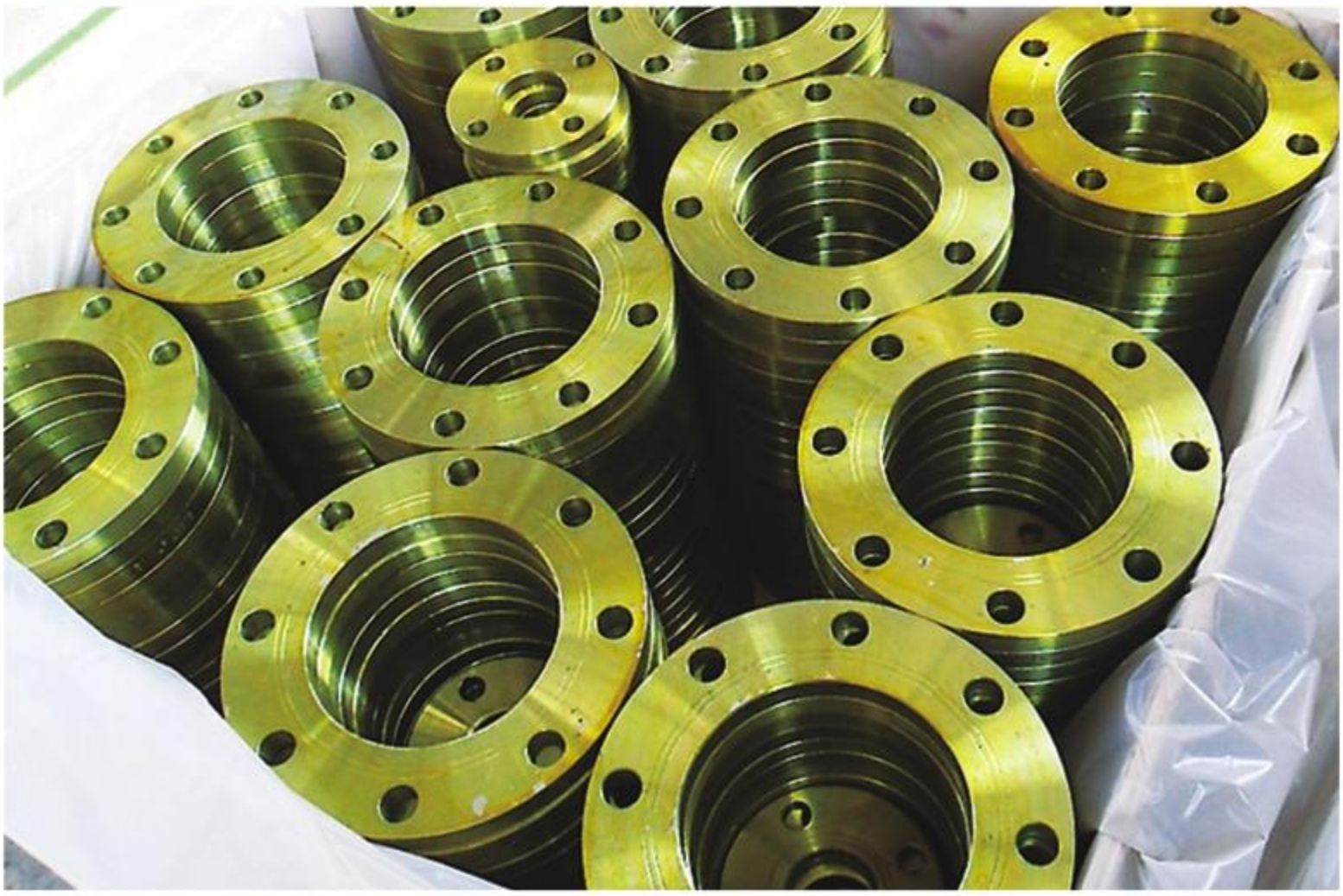



高压法兰 High pressure flange



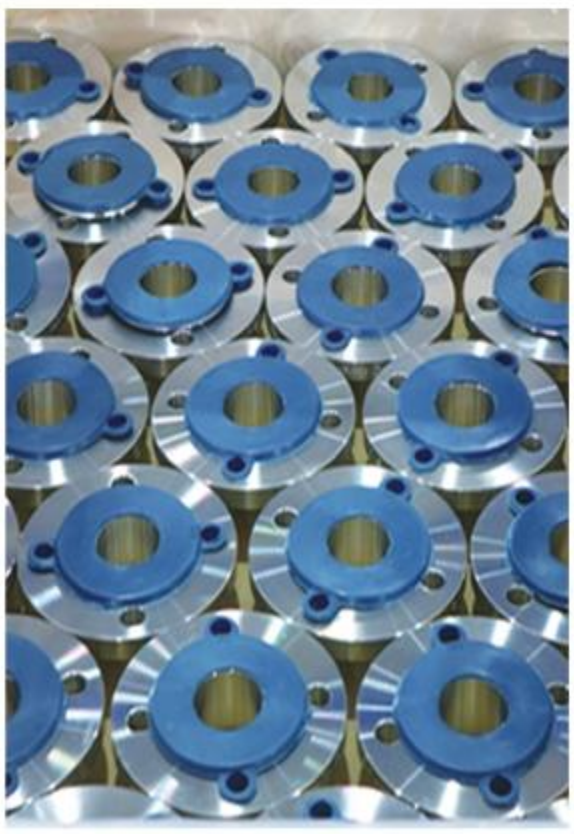

不锈钢法兰 Stainless steel flange

沧州傲森迪克管件制造有限公司

CANGZHOU AUTHENTIC PIPE-FITTING MANUFACTURING CO.,LTD.

异径管 Reducer

异径管生产范围

外径：1/2" ~ 60"
壁厚：4mm ~ 200mm
产品类型：同心异径管、偏心异径管

REDUCER

OD:1/2" ~ 60"
THICKNESS:
4mm ~ 200mm
PATTERN:
CONCENTRIC REDUCER
ECCENTRIC REDUCER











傲森迪克管件
AUTHENTIC
PIPE-FITTING
诚信赢天下 合力建未来
Good faith wins the world and builds the future together

管帽 Cap

管帽生产范围

外径：1/2″ ~60″
壁厚：4mm~200mm

CAP

OD: 1/2″ ~60″
THICKNESS: 4mm~200mm







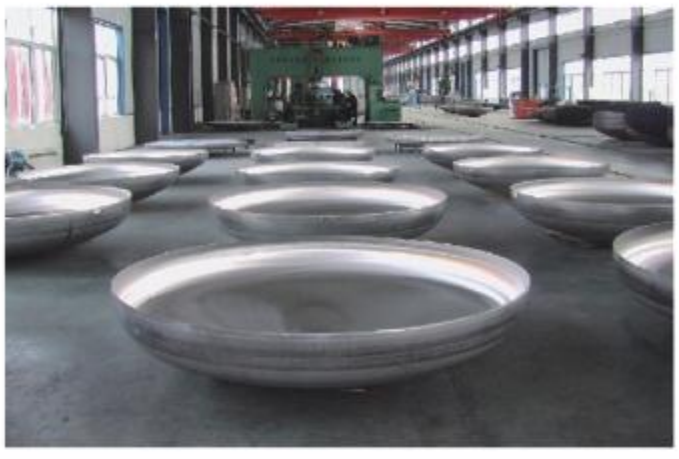



设备展示
EQUIPMENT DISPLAY



6000T液压机 6000T hydraulic machine



弯管推制机
Bend pushing machine



计算机控制弯管机
Computer-controlling bend making machine

傲森迪克管件
AUTHENTIC
PIPE-FITTING
诚信赢天下 合力建未来
Good faith wins the world and builds the future together

Production equipment 生产设备



弯头推制机 Elbow pushing machine



热处理炉 Heat-treated furnace



弯头推制机 Elbow pushing machine



喷砂机 Peening machine

沧州傲森迪克管件制造有限公司

CANGZHOU AUTHENTIC PIPE-FITTING MANUFACTURING CO.,LTD.

生产设备 Production equipment



三通液压机 Tee hydraulic machine



数控车床 Numerical control lathe

傲森迪克管件
AUTHENTIC
PIPE-FITTING
诚信赢天下 合力建未来
Good faith wins the world and builds the future together



先进的生产设备是生产出高品质产品的基础保障。

Advanced production equipment is the basic guarantee for producing high quality products.

法兰锻锤 Flange forging hammer



钻床 Drilling machine



锯床 Sawing machine



坡口机 Beveling machine



大立车 Large vertical lathe

沧州傲森迪克管件制造有限公司

CANGZHOU AUTHENTIC PIPE-FITTING MANUFACTURING CO.,LTD.

检测设备 Testing equipment



冲击试验 Impulse test

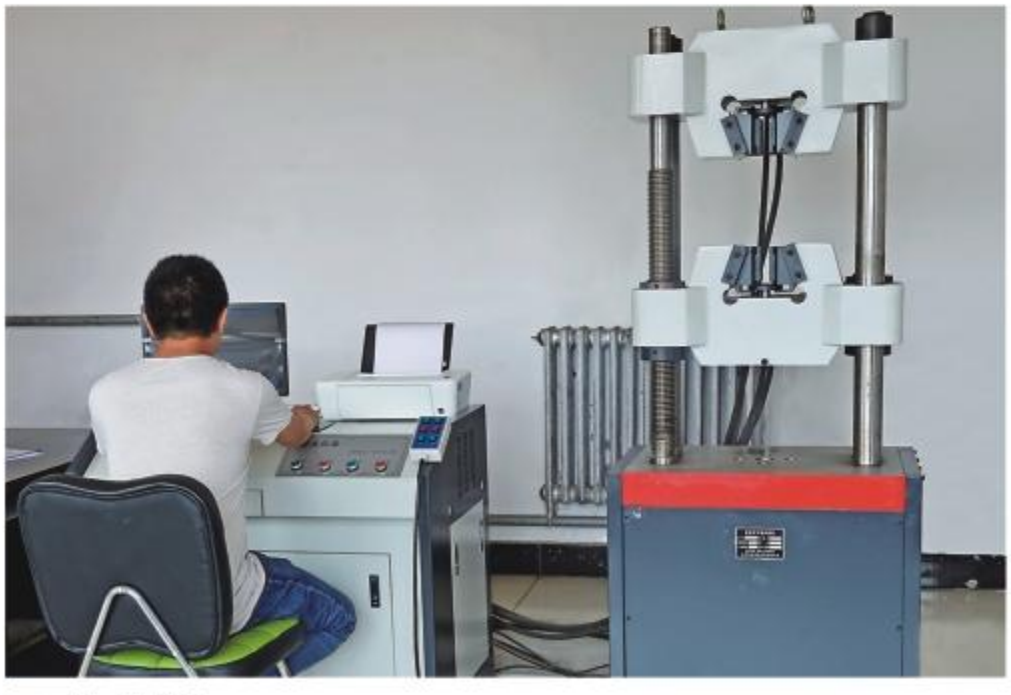

拉力试验 Tension test



直读光谱仪 Direct reading spectrometer

傲森迪克管件
AUTHENTIC
PIPE-FITTING
诚信赢天下 合力建未来
Good faith wins the world and builds the future together

魔鬼总是存在于细节之中。
管理要求把微小细节放大，
才能看到本质。
细节表现出高度的专业精神，
只有不放过细节，
才不存在管理死角。

The devil is always in the details.
Management requires that small details be magnified to see the essence.
Details show a high degree of professionalism, and there is no management corner until details are missed.



冲击试样缺口投影仪
Notch projector of impact specimen



低温槽
Cryogenic tank



直读光谱仪
Direct reading spectrometer



里氏硬度计
Richter hardenometer



化学实验室 Chemistry laboratory



X光探伤 X-ray fault detection

技术参数

TECHNICAL PARAMETERS

标准数据是一切生产和质量控制行为的准则。在生产中我们严格执行国家标准、国际标准。以科技决策，规范运作，不断创新作为标准的演绎及延伸，使企业的发展及提升日益完善。

Standard data is the criterion of all production and quality control behavior In production, we strictly enforce national standards, international standards. To the decision-making of science and technology, standardized operation, innovation as standard Deductive and outspread, make the enterprise and promote the development of increasingly perfect.



傲森迪克管件
AUTHENTIC
PIPE-FITTING
诚信赢天下 合力建未来
Good faith wins the world and builds the future together

技术参数
Technical parameters

壁厚表GB12459、GB/T13401
Wall Thickness Schedule

公称通径 Nominl Pipe Size DN	外径 Outside Diameter D		公称壁厚T Nominal Wall Thickness														
	A 系列	B 系列	sch5s	sch10s	sch20s	LG	sch20	sch30	STD	sch40	sch60	xs	sch80	sch100	sch120	sch140	sch160
15	21.3	18	1.6	2.1	2.6	-	-	-	-	2.9	-	-	3.6	-	-	-	4.5
20	26.9	25	1.6	2.1	2.6	-	-	-	-	2.9	-	-	4.0	-	-	-	5.6
25	33.7	32	1.6	2.8	3.2	-	-	-	-	3.2	-	-	4.5	-	-	-	6.3
32	42.4	38	1.6	2.8	3.2	-	-	-	-	3.6	-	-	5.0	-	-	-	6.3
40	48.3	45	1.6	2.8	3.2	-	-	-	-	3.6	-	-	5.0	-	-	-	7.1
50	60.3	57	1.6	2.8	3.6	-	3.2	-	-	4.0	-	-	5.6	-	-	-	8.8
65	76.1(73)	76	2.0	3.0	3.6	-	4.5	-	-	5.0	-	-	7.1	-	-	-	10.0
80	88.9	89	2.0	3.0	4.0	-	4.5	-	-	5.6	-	-	8.0	-	-	-	11.0
90	101.6	-	2.0	3.0	4.0	-	4.5	-	-	5.6	-	-	8.0	-	-	-	12.5
100	114.3	108	2.0	3.0	4.0	-	5.0	-	-	5.9	-	-	8.8	-	11.0	-	14.2
125	139.7	133	2.9	3.4	5.0	-	5.0	-	-	6.3	-	-	10.0	-	12.5	-	16.0
150	168.3	159	2.9	3.4	5.0	-	5.6	-	-	7.1	-	-	11.0	-	14.2	-	17.5
200	219.1	219	2.9	4.0	6.3	-	6.3	7.1	-	8.0	10.0	-	12.5	16.0	17.5	20.0	22.2
250	273.0	273	3.6	4.0	6.3	-	6.3	8.0	-	8.8	12.5	-	16.0	17.5	22.2	25.0	28.0
300	323.9	325	4.0	4.5	6.3	-	6.3	8.8	-	10.0	14.2	-	17.5	22.2	25.0	28.0	32.0
350	355.6	377	4.0	5.0	8.0	8.0	8.0	10.0	10.0	11.0	16.0	13.0	20.0	25.8	28.0	32.0	36.0
400	406.4	426	4.0	5.0	8.0	8.0	8.0	10.0	10.0	12.5	17.5	13.0	22.2	28.0	30.0	36.0	40.0
450	457.0	478	4.0	5.0	8.0	8.0	8.0	11.0	10.0	14.2	20.0	13.0	25.0	30.0	36.0	40.0	45.0
500	508.0	529	5.0	5.6	8.0	8.0	10.0	12.5	10.0	16.0	20.0	13.0	28.0	32.0	40.0	45.0	50.0
550	559	-	5.0	5.6	-	8.0	-	-	10.0	-	-	13.0	30.0	-	-	-	-
600	610	630	5.6	6.3	-	8.0	-	-	10.0	17.5	-	13.0	32.0	-	-	-	-
650	660	-	-	-	-	8.0	-	-	10.0	-	-	13.0	-	-	-	-	-
700	711	720	-	-	-	8.0	-	-	10.0	-	-	13.0	-	-	-	-	-
750	762	-	-	-	-	8.0	-	-	10.0	-	-	13.0	-	-	-	-	-
800	813	820	-	-	-	8.0	-	-	10.0	-	-	13.0	-	-	-	-	-
850	864	-	-	-	-	8.0	-	-	10.0	-	-	13.0	-	-	-	-	-
900	914	920	-	-	-	8.0	-	-	10.0	-	-	.13.0	-	-	-	-	-
950	965	-	-	-	-	8.0	-	-	10.0	-	-	13.0	-	-	-	-	-
1000	1016	1020	-	-	-	8.0	-	-	10.0	-	-	13.0	-	-	-	-	-
1050	1067	-	-	-	-	8.0	-	-	10.0	-	-	13.0	-	-	-	-	-
1100	1118	1120	-	-	-	8.0	-	-	10.0	-	-	13.0	-	-	-	-	-
1150	1168	-	-	-	-	8.0	-	-	10.0	-	-	13.0	-	-	-	-	-
1200	1219	1220	-	-	-	8.0	-	-	10.0	-	-	13.0	-	-	-	-	-

注：用户对坡口形式有特殊要求，可按用户与制造厂达成的协议加工。
Note:The bevel can be made according to the special requirements of the customers.

沧州傲森迪克管件制造有限公司

CANGZHOU AUTHENTIC PIPE-FITTING MANUFACTURING CO.,LTD.

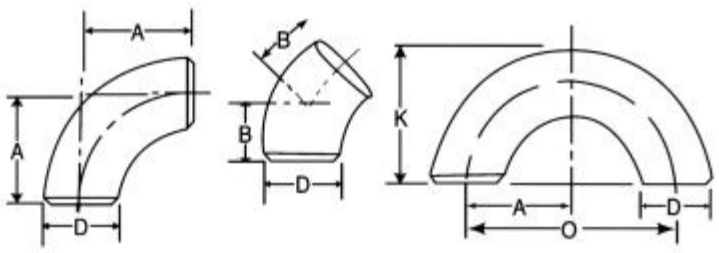

长半径弯头

LONG RADIUS ELBOWS(90°,45° &180°)

公称直径 Nominal Diameter		外径 Outside Diameter	弯曲半径 Radius	结构长度 Length	中心距 Center to Center	高度 Back to Face
mm	in	D	A	B	O	K
15	1/2	18	38	16	76	46
		21.3				48
20	3/4	25	38	16	76	50
		26.7				51
25	1	32	38	16	76	54
		33.4				56
32	1.1/4	38	48	20	95	67
		42.2				70
40	1.1/2	45	57	24	114	79
		48.3				83
50	2	57	76	32	152	104
		60.3				106
65	2.1/2	73	95	40	190	132
		76.1				133
80	3	89	114	47	227	159
90	3.1/2	101.6	133	55	267	184
100	4	108	152	63	305	206
		114.3				210
125	5	133	190	79	381	256
		141.3				262
		139.7				260
150	6	159	229	95	457	309
		168.3				313
		165.2				311
200	8	219	305	126	610	413
		216.3				414
250	10	273	381	158	762	513
		267.4				518
300	12	325	457	189	914	619
		323.9				619
		318				616
350	14	377	533	221	1067	721
		355.6				711
400	16	426	610	253	1219	823
		406.4				813
450	18	478	686	284	1371.6	914.4
		457.2				
500	20	529	762	316	1524	1016
		508.0				
550	22	559	838	347	1676.4	1117.6
600	24	630	914	379		
		610			1828.8	1219.2
650	26	660	991	410		
700	28	720	1067	442		
		711				
750	30	762	1143	473		
800	32	820	1219	505		
		813				
850	34	864	1295	537		
900	36	920	1372	568		
		914				
950	38	965	1448	600		
1000	40	1020	1524	631		
		1016				
1050	42	1067	1600	663		
1100	44	1120	1675	694		
1150	46	1168	1753	726		
1200	48	1220	1829	758		

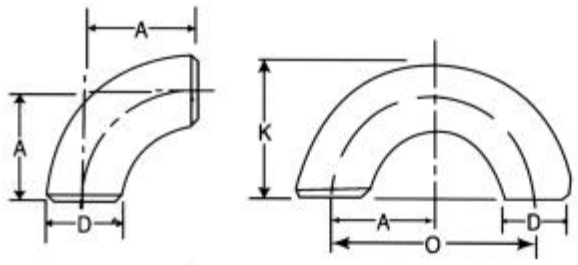

短半径弯头

SHORT RADIUS ELBOWS(90°,&180°)

公称直径 Nominal Diameter		外径 Outside Diameter	弯曲半径 Radius	中心距 Center to Center	高度 Back to Face
mm	in	D	A	O	K
25	1	32	25	51	40
		33.4			41
32	1.1/4	38	32	64	50
		42.2			52
40	1.1/2	45	38	76	60
		48.3			62
50	2	57	51	102	79
		60.3			81
65	2.1/2	73	64	127	100
		76			102
80	3	89	76	152	120
90	3.1/2	101.6	89	178	140
100	4	108	102	203	156
		114.3			159
125	5	133	127	254	193
		139.7			197
		141.3			197
150	6	159	152	305	232
		168.3			237
		165.2			235
200	8	219	203	406	313
		216.3			311
250	10	273	254	508	390
		267.4			391
300	12	325	305	610	467
		323.9			467
		318.5			464
350	14	377	356	711	533
		355.6			544
400	16	426	406	813	620
		406.4			610
450	18	478	457		
		457.2		914.4	685.8
500	20	529	508		
		508		1016	762
550	22	559	559	1117.6	838.2
600	24	630	610		
		610		1219.2	914.4
650	26	660	660		
700	28	720	711		
		711			
750	30	762	762		
800	32	820	813		
		813			
850	34	864	864		
900	36	920	914		
		914			
950	38	965	965		
1000	40	1020	1016		
		1016			
1050	42	1067	1067		
1100	44	1120	1118		
		1118			
1150	46	1168	1168		
1200	48	1220	1219		
		1219			

注：用户对坡口形式有特殊要求，可按用户与制造厂达成的协议加工。

Note:The bevel can be made according to the special requirements of the customers.

傲森迪克管件
AUTHENTIC
PIPE-FITTING
诚信赢天下 合力建未来
Good faith wins the world and builds the future together

技术参数
Technical parameters

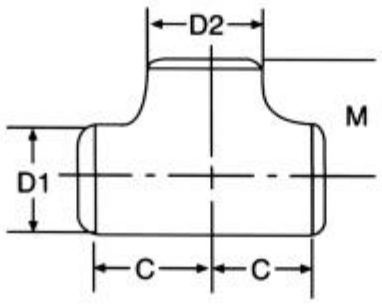

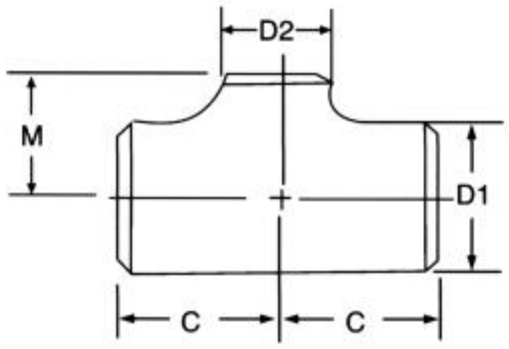

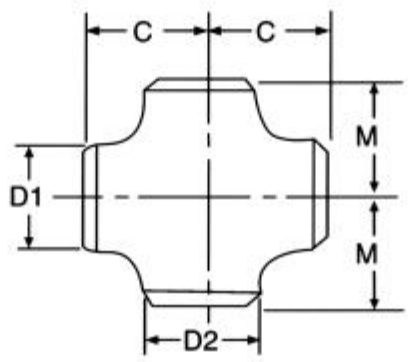

三通、四通（同径、异径）TEES AND CROSSES

公称直径 NominalDiameter		外径 OutsideDiameter	中心至端面 Center to End	
mm	in	D1×D2	C	M
20×20	3/4×3/4	25×25 26.7×26.7	29	29
20×15	3/4×1/2	25×20 26.7×21.3	29	29
25×25	1×1	32×32 33.4×33.4	38	38
25×20	1×3/4	32×25 33.4×26.7	38	38
32×32	1.1/4×1.1/4	38×38 42.2×42.2	48	48
32×25	1.1/4×1	38×32 42.2×33.4	48	48
40×40	1.1/2×1.1/2	45×45 48.3×48.3	57	57
40×25	1.1/2×1	45×32 48.3×33.4	57	57
50×50	2×2	57×57 60.3×60.3	64	64
50×25	2×1	57×32 60.3×33.4	64	51
65×65	2.1/2×2.1/2	76×76 73×73	76	76
65×40	2.1/2×1.1/2	76×45 73.0×48.3	76	67
80×80	3×3	89×89	86	86
80×50	3×2	89×57 88.9×60.3	86	76
100×100	4×4	108×108 114.3×114.3	105	105
100×50	4×2	108×57 114.3×60.3	105	89
125×125	5×5	133×133 141.3×141.3	124	124
125×80	5×3	133×89 141.3×88.9	124	111
150×150	6×6	159×159 168.3×168.3	143	143
150×100	6×4	159×108 168.3×114.3	143	130
200×200	8×8	219×219	178	178
200×100	8×4	219×108 219.1×114.3	178	156
250×250	10×10	273×273	216	216
250×125	10×5	273×133 273.1×141.3	216	191
300×300	12×12	325×325 323.9×323.9	254	254
300×200	12×8	325×219 323.9×219.1	254	229

公称直径 NominalDiameter		外径 OutsideDiameter	中心至端面 Center to End	
mm	in	D1×D2	C	M
350×350	14×14	377×377 355.6×355.6	279	279
350×200	14×8	377×219 355.6×219.1	279	248
400×400	16×16	426×426 406.4×406.4	305	305
400×250	16×10	426×273 406.4×273.1	305	283
450×450	18×18	478×478 457×457	343	343
450×250	18×10	478×273 457×273.1	343	308
500×500	20×20	529×529 508×508	381	381
500×300	20×12	529×325 508×323.9	381	346
550×550	22×22	559×559	419	419
550×400	22×16	559×406.4	419	381
600×600	24×24	630×630 610×610	432	432
600×400	24×16	630×426 610×406.4	432	406
650×650	26×26	660×660	495	495
700×700	28×28	720×720 711×711	521	521
700×400	28×16	720×426 711×406.4	521	457
750×750	30×30	762×762	559	559
750×500	30×20	762×508	559	508
800×800	32×32	820×820 813×813	597	597
800×500	32×20	820×529 813×508	597	533
850×850	34×34	864×864	635	635
850×600	34×24	864×610	635	584
900×900	36×36	920×920 914×914	673	673
900×500	36×20	920×529 914×508	673	584
950×950	38×38	965×965	711	711
950×600	38×24	965×610	711	635
1000×1000	40×40	1020×1020 1016×1016	749	749
1100×700	44×28	1120×720 1118×711	813	698
1150×1150	46×46	1168×1168	851	800
1150×800	46×32	1168×813	851	749
1200×1200	48×48	1220×1220 1219×1219	889	838
1200×650	48×26	1219×660	889	762

注：用户对坡口形式有特殊要求，可按用户与制造厂达成的协议加工。
Note:The bevel can be made according to the special requirements of the customers.

沧州傲森迪克管件制造有限公司

CANGZHOU AUTHENTIC PIPE-FITTING MANUFACTURING CO.,LTD.

异径接头（同心、偏心）

REDUCERS （CONCENTRIC，ECCENTRIC）

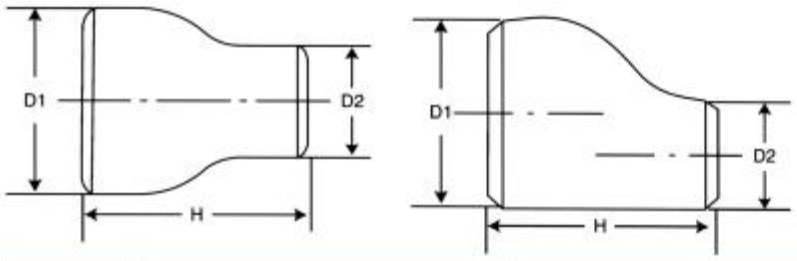

公称直径 Nominal Diameter		外径 Outside Diameter	高度 End to End	公称直径 Nominal Diameter		外径 Outside Diameter	高度 End to End
mm	in	D1×D2	H	mm	in	D1×D2	H
20×15	3/4×1/2	25×18 26.7×21.3	38	400×250		426×273 406.4×273.1	356
25×20	1×3/4	32×25 33.4×26.7	51	400×200	16×8	426×219 406.4×219.1	356
25×15	1×1/2	32×18 33.4×21.3	51	400×150		426×159 406.4×168.3	356
32×25	1.1/4×1	38×32 42.2×33.4	51	450×400	18×16	478×426 457×406.4	381
32×20	1.1/4×3/4	38×25 42.2×26.7	51	450×350		478×377 457×355.6	381
40×32	1.1/2×1.1/4	45×38 48.3×42.2	64	450×300	18×12	478×325 457×323.9	381
40×25	1.1/2×1	45×32 48.3×33.4	64	450×250		478×273 457×273.1	381
50×40	2×1.1/2	57×45 60.3×48.3	76	450×200	18×8	478×219 457×219.1	381
50×25	2×1	57×32 60.3×33.4	76	500×450		529×478 508×457	508
65×50	2.1/2×2	76×57 73.0×60.3	89	500×400	20×16	529×426 508×406.4	508
65×32	2.1/2×1.1/4	76×38 73.0×42.2	89	500×350		529×377 508×355.6	508
80×65	3×2.1/2	89×76 88.9×73.0	89	500×300	20×12	529×325 508×323.9	508
80×40	3×1.1/2	89×45 88.9×48.3	89	500×250		529×273 508×273.1	508
90×40	3.1/2×1.1/2	101.6×48.3	102	550×500	22×20	559×508	508
100×80	4×3	108×89 114.3×88.9	102	600×500		630×529 610×508	508
100×50	4×2	108×57 114.3×60.3	102	600×450	24×18	630×478 610×457	508
125×100	5×4	133×108 141.3×114.3	127	600×400		630×426 610×406.4	508
125×80	5×3	133×89 141.3×88.9	127	650×550	26×22	660×559	610
				650×450	26×18	660×457	610
150×125	6×5	159×133 168.3×141.3	140	700×600		720×630	610
						711×310	
150×80	6×3	159×89 168.3×88.9	140	700×550	28×22	711×559	610
				750×700	30×28	762×711	610
200×150	8×6	219×159 219.1×168.3	152	750×600		762×610	610
				800×750		813×762	610
200×100	8×4	219×108 219.1×114.3	152	800×700	32×28	820×720 813×711	610
200×80	8×3	219×89 219.1×88.9	152	800×600		820×630 813×610	610
250×200	10×8	273×219	178	850×700	34×28	864×711	610
250×150	10×6	273×159 273.1×168.3	178	900×700		920×720 914×711	610
250×100	10×4	273×108 273.1×114.3	178	950×900	38×36	965×914	610
				950×800	38×32	965×813	610
300×250	12×10	325×273 323.9×273.1	203	1000×900		1020×920 1016×914	610
300×200	12×8	325×219 323.9×219.1	203	1000×850	40×34	1016×864	610
				1050×850	42×34	1067×864	711
300×150	12×6	325×159 323.9×168.3	203	1100×1000		1120×1020 1118×1016	711
300×125	12×5	325×133 323.9×141.3	203	1100×900	44×36	1120×920 1118×914	711
350×300	14×12	377×325 355.6×323.9	330	1150×1050		1168×1067	711
				1150×950		1168×965	711
350×250	14×10	377×273 355.6×273.1	330	1200×1150	48×46	1219×1168	711
				1200×1050	48×42	1219×1067	711
350×200	14×8	377×219 355.6×219.1	330	1200×1100		1220×1120 1219×1118	711
350×150	14×6	377×159 355.6×168.3	330	1200×1000	48×40	1220×1020 1219×1016	711
100×350	16×14	426×377 406.4×355.6	356	1200×950		1219×965	711

傲森迪克管件
AUTHENTIC
PIPE-FITTING
诚信赢天下 合力建未来
Good faith wins the world and builds the future together

技术参数
Technical parameters

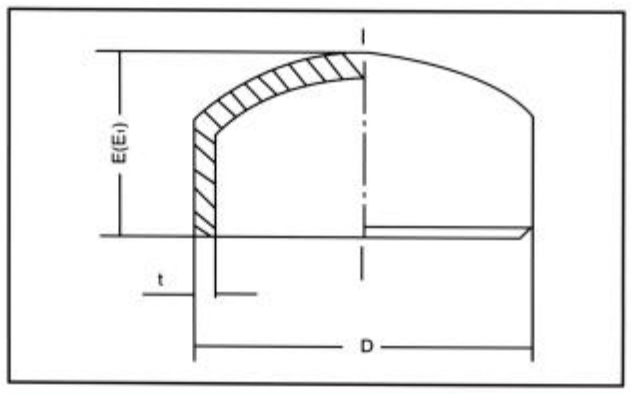

Caps

管帽

公称直径 NominalDiameter		外径 Outside Diameter	高度 End to End	
mm	in	D	E	E_1
15	1/2	18 21.3	25	
20	3/4	25 26.9	25	
25	1	32 33.7	38	
32	1.1/4	38 42.4	38	
40	1.1/2	45 48.3	38	
50	2	57 60.3	38	44
65	2.1/2	76 73	38	51
80	3	89 88.9	51	64
100	4	108 114.3	64	76
125	5	133 139.7 141.3	76	89
150	6	159 168.3 165.2	89	102
200	8	219 216.1	102	127
250	10	273 267.4	127	152
300	12	325 323.9 318.5	152	178

公称直径 Nominal Diameter		外径 Outside Diameter	高度 End to End	
mm	in	D	E	E_1
350	14	377 355.6	165	191
400	16	426 406.4	178	203
450	18	478 457.2	203	229
500	20	529 508.0	229	254
550	22	559	254	
600	24	630 610	267	305
650	26	660	267	
700	28	720 711	267	
750	30	762	267	
800	32	820 813	267	
850	34	864	267	
900	36	920 914	267	
950	38	965	305	
1000	40	1020 1016	305	
1050	42	1067	305	
1100	44	1120 1118	343	
1150	46	1168	343	
1200	48	1220 1219	343	

沧州傲森迪克管件制造有限公司

CANGZHOU AUTHENTIC PIPE-FITTING MANUFACTURING CO.,LTD.

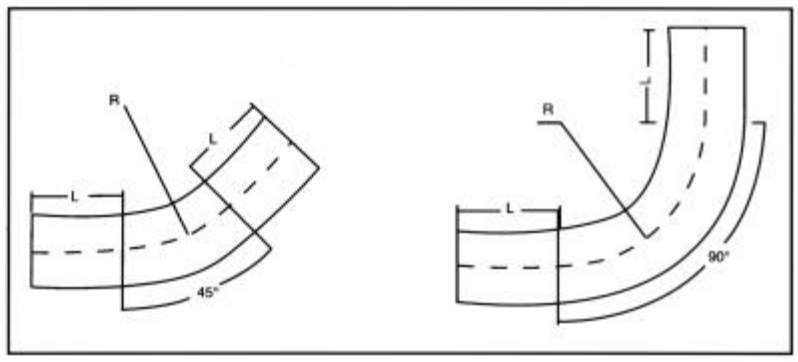

Bends

弯管

R=4D

Nominal Pipe Size 公称尺寸	Outside Diameter at Bevel:D 坡口处外径：D	Bend Radius:R 弯曲半径：R Length of Straight:L 直管段长度：L	Wall Thickness:T 壁厚：T	
DN	mm	mm	Sch NO	mm
50	57 60.3	R=200 L=350	40 80	4.0 5.6
65	76 73.0	R=260 L=350	40 80	5.0 7.1
80	89 88.9	R=320 L=350	40 80	5.6 8.0
100	108 114.3	R=400 L=350	40 80	5.9 8.8
125	133 141.3	R=500 L=350	40 80	6.3 10.0
150	159 168.3	R=600 L=350	40 80	7.1 11.0
200	219 219.1	R=800 L=700	40 80	8 12.5
250	273 273.1	R=1000 L=700	40 80	8.8 16.0
300	325 323.9	R=1250 L=700	40 80	10 17.5
350	377 355.6	R=1400 L=700	40 80	11.0 20.0
400	426 406.4	R=1600 L=700	40 80	12.5 22.2
450	478 457	R=1800 L=700	40 80	14.2 25
500	529 508	R=2000 L=700	40 80	16 28
600	630 610	R=2400 L=700	40 80	17.48 30.96

R=5D

Nominal Pipe Size 公称尺寸	Outside Diameter at Bevel:D 坡口处外径：D	Bend Radius:R 弯曲半径：R Length of Straight:L 直管段长度：L	Wall Thickness:T 壁厚：T	
DN	mm	mm	Sch NO	mm
50	57 60.3	R=200 L=350	40 80	4.0 5.6
65	76 73.0	R=325 L=350	40 80	5.0 7.1
80	89 88.9	R=400 L=350	40 80	5.6 8.0
100	108 114.3	R=500 L=350	40 80	5.9 8.8
125	133 141.3	R=625 L=350	40 80	6.3 10.0
150	159 168.3	R=750 L=350	40 80	7.1 11.0
200	219 219.1	R=1000 L=700	40 80	8 12.5
250	273 273.1	R=1250 L=700	40 80	8.8 16.0
300	325 323.9	R=1500 L=700	40 80	10 17.5
350	377 355.6	R=1750 L=700	40 80	11.0 20.0
400	426 406.4	R=2000 L=700	40 80	12.5 22.2
450	478 457	R=2250 L=700	40 80	14.2 25
500	529 508	R=2500 L=700	40 80	16 28
600	630 610	R=3000 L=700	40 80	17.48 30.96

注：用户对坡口形式有特殊要求，可按用户与制造厂达成的协议加工。

Note:The bevel can be made according to the special requirements of the customers.

傲森迪克管件
AUTHENTIC
PIPE-FITTING
诚信赢天下 合力建未来
Good faith wins the world and builds the future together

技术参数
Technical parameters

Wrought Steel Buttwelding Fittings(ASME)
Long and Short Radius Elbows

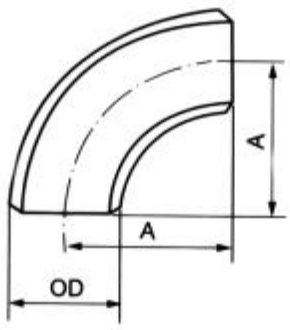

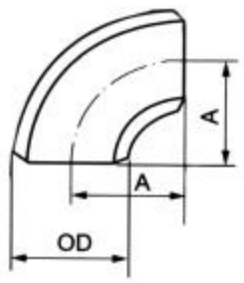

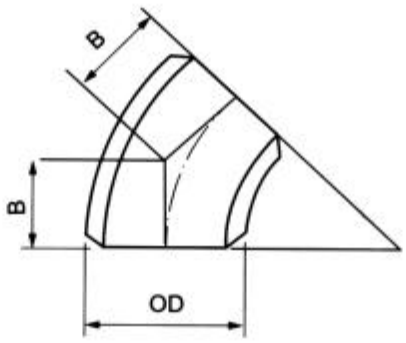

ANSI B16.9, B16.28

Nominal pipe size(NPS)	Outside Diameter at bevel OD		Center-to-End							
			90° Elbows A				45° Elbows B			
			Long Radius		Short Radius		Long Radius		Short Radius	
	IN	MM	IN	MM	IN	MM	IN	MM	IN	MM
1/2	0.84	21.3	1.5	38	-	-	0.62	16	-	-
3/4	1.05	26.7	1.12	29	-	-	0.44	11	-	-
1	1.32	33.4	1.5	38	1	25	0.88	22	0.41	10
1 1/4	1.66	42.2	1.88	48	1.25	32	1	25	0.52	13
1 1/2	1.9	48.3	2.25	57	1.5	38	1.12	29	0.62	16
2	2.38	60.3	3	76	2	51	1.38	35	0.83	21
2 1/2	2.88	73.0	3.75	95	2.5	64	1.75	44	1.04	26
3	3.5	88.9	4.5	114	3	76	2	51	1.24	32
3 1/2	4	101.6	5.25	133	3.5	89	2.25	57	1.45	37
4	4.5	114.3	6	152	4	102	2.5	64	1.66	42
5	5.56	141.3	7.5	190	5	127	3.12	79	2.07	53
6	6.62	168.3	9	229	6	152	3.75	95	2.50	63
8	8.62	219.1	12	305	8	203	5	127	3.31	84
10	10.75	273.0	15	381	10	254	6.25	159	4.14	105
12	12.75	323.8	18	457	12	305	7.5	190	4.97	126
14	14	355.6	21	533	14	356	8.75	222	5.80	147
16	16	406.4	24	610	16	406	10	254	6.63	168
18	18	457	27	686	18	457	11.25	286	7.46	189
20	20	508	30	762	20	508	12.5	318	8.28	210
22	22	559	33	838	22	559	13.5	343	9.11	232
24	24	610	36	914	24	610	15	381	9.94	253
26	26	660	39	991	26	660	16	405	10.77	274
28	28	711	42	1067	28	711	17.25	438	11.60	295
30	30	762	45	1143	30	762	18.5	470	12.43	316
32	32	813	48	1219	32	813	19.75	502	14.89	378
34	34	864	51	1295	34	864	21	533	14.08	358
36	36	914	54	1372	36	914	22.25	565	14.91	379
38	38	965	57	1448	38	965	23.62	600	15.74	400
40	40	1016	60	1524	40	1016	24.88	632	16.57	421
42	42	1067	63	1600	42	1067	26	660	17.40	442
44	44	1118	66	1676	44	1118	27.38	695	18.23	463
46	46	1168	69	1753	46	1168	28.62	727	19.05	484
48	48	1219	72	1829	48	1219	29.88	759	19.88	505

沧州傲森迪克管件制造有限公司

CANGZHOU AUTHENTIC PIPE-FITTING MANUFACTURING CO.,LTD.

Wrought Steel Buttwelding Fittings(ASME)
Long and Short Radius Bend

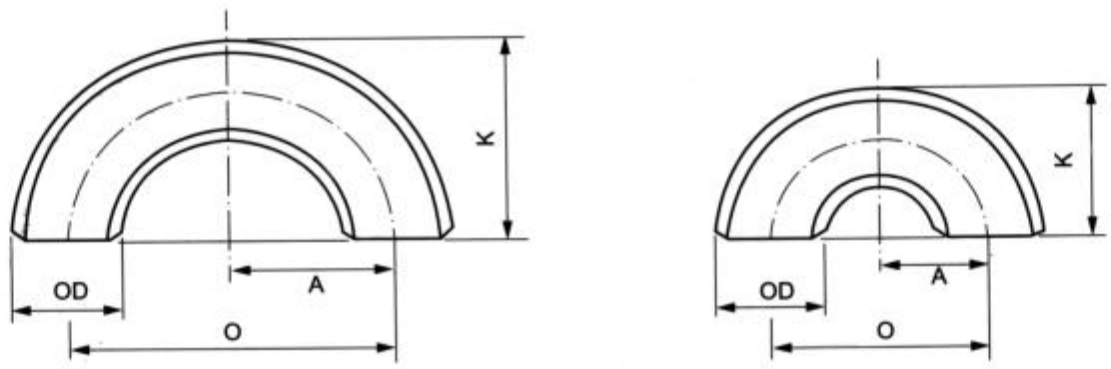

ANSI B16.9, B16.28

Nominal pipe size(NPS)	Outside Diameter at bevel OD		Center-to-End				End-to-End			
			180 Returns O				180 Returns K			
			Long Radius		Short Radius		Long Radius		Short Radius	
	IN	MM	IN	MM	IN	MM	IN	MM	IN	MM
1/2	0.84	21.3	3	76	-	-	1.88	48	-	-
3/4	1.05	26.7	2.25	57	-	-	1.69	43	-	-
1	1.32	33.4	3	76	2	51	2.19	56	1.62	41
1 1/4	1.66	42.2	3.75	95	2.5	64	2.75	70	2.06	52
1 1/2	1.9	48.3	4.5	114	3	76	3.25	83	2.44	62
2	2.38	60.3	6	152	4	102	4.19	106	3.19	81
2 1/2	2.88	73.0	7.5	190	5	127	5.19	132	3.94	100
3	3.5	88.9	9	229	6	152	6.25	159	4.75	121
3 1/2	4	101.6	10.5	267	7	178	7.25	184	5.5	140
4	4.5	114.3	12	305	8	203	8.25	210	6.25	159
5	5.56	141.3	15	381	10	254	10.31	262	7.75	197
6	6.62	168.3	18	457	12	305	12.31	313	9.31	237
8	8.62	219.1	24	610	16	406	16.31	414	12.31	313
10	10.75	273.0	30	762	20	508	20.38	518	15.38	391
12	12.75	323.8	36	914	24	610	24.38	619	18.38	467
14	14	355.6	42	1067	28	711	28	711	21	533
16	16	406.4	48	1219	32	813	32	813	24	610
18	18	457	54	1372	36	914	36	914	27	686
20	20	508	60	1524	40	1016	40	1016	30	762
22	22	559	66	1676	44	1118	44	1118	33	838
24	24	610	72	1829	48	1219	48	1219	36	914

技术参数
Technical parameters

Wrought Steel Buttwelding Fittings(ASME)
Reducing Tees and Concentric & Eccentric Reducers

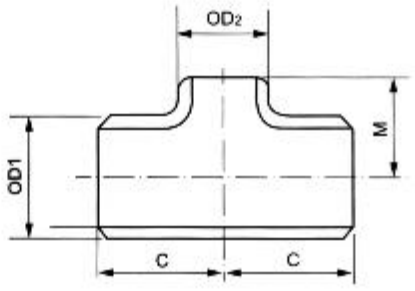

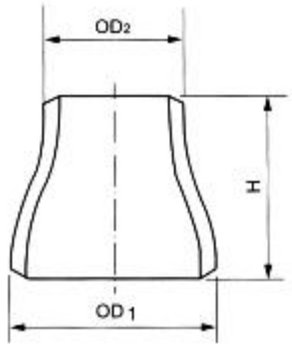

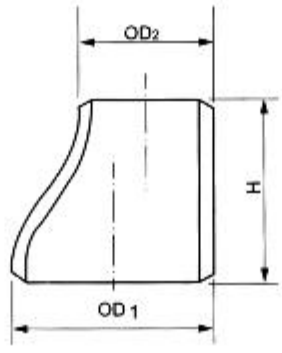

ANSI B16.9

Nominal pipe size(NPS)	Outside Diameter at Bevel				Center-to-End				End-to-End	
	OD1		OD2		C		M		H	
	IN	MM	IN	MM	IN	MM	IN	MM	IN	MM
3/4×1/2	1.05	26.7	0.84	21.3	1.12	29	1.12	29	1.5	38
1×3/4	1.32	33.4	1.05	26.7	1.5	38	1.5	38	2	51
1×1/2	1.32	33.4	0.84	21.3	1.5	38	1.5	38	2	51
1 1/4×1	1.66	42.2	1.32	33.4	1.88	48	1.88	48	2	51
1 1/4×3/4	1.66	42.2	1.05	26.7	1.88	48	1.88	48	2	51
1 1/4×1/2	1.66	42.2	0.84	21.3	1.88	48	1.88	48	2	51
1 1/2×1 1/4	1.9	48.3	1.66	42.2	2.25	57	2.25	57	2.5	64
1 1/2×1	1.9	48.3	1.32	33.4	2.25	57	2.25	57	2.5	64
1 1/2×3/4	1.9	48.3	1.05	26.7	2.25	57	2.25	57	2.5	64
1 1/2×1/2	1.9	48.3	0.84	21.3	2.25	57	2.25	57	2.5	64
2×1 1/2	2.38	60.3	1.9	48.3	2.5	64	2.38	60	3	76
2×1 1/4	2.38	60.3	1.66	42.2	2.5	64	2.25	57	3	76
2×1	2.38	60.3	1.32	33.4	2.5	64	2	51	3	76
2×3/4	2.38	60.3	1.05	26.7	2.5	64	1.75	44	3	76
2×1/2	2.38	60.3	0.84	21.3	2.5	64	-	-	3	76
2 1/2×2	2.88	73	2.38	60.3	3	76	2.75	70	3.5	89
2 1/2×1 1/2	2.88	73	1.9	48.3	3	76	2.62	67	3.5	89
2 1/2×1 1/4	2.88	73	1.66	42.2	3	76	2.5	64	3.5	89
2 1/2×1	2.88	73	1.32	33.4	3	76	2.25	57	3.5	89
2 1/2×3/4	2.88	73	1.05	26.7	3	76	-	-	3.5	89
2 1/2×1/2	2.88	73	0.84	21.3	3	76	-	-	3.5	89
3×2 1/2	3.5	88.9	2.88	73	3.38	86	3.25	83	3.5	89
3×2	3.5	88.9	2.38	60.3	3.38	86	3	76	3.5	89
3×1 1/2	3.5	88.9	1.9	48.3	3.38	86	2.88	73	3.5	89
3×1 1/4	3.5	88.9	1.66	42.2	3.38	86	2.75	70	3.5	89
3×1	3.5	88.9	1.32	33.4	3.38	86	-	-	3.5	89
3×3/4	3.5	88.9	1.05	26.7	3.38	86	-	-	3.5	89
3×1/2	3.5	88.9	0.84	21.3	3.38	86	-	-	3.5	89
3 1/2×3	4	101.6	3.5	88.9	3.75	95	3.62	92	4	102
3 1/2×2 1/2	4	101.6	2.88	73	3.75	95	3.5	89	4	102
3 1/2×2	4	101.6	2.38	60.3	3.75	95	3.25	83	4	102
3 1/2×1 1/2	4	101.6	1.9	48.3	3.75	95	3.12	79	4	102
3 1/2×1 1/4	4	101.6	1.66	42.2	3.75	95	-	-	4	102
4×3 1/2	4.5	114.3	4	101.6	4.12	105	4	102	4	102
4×3	4.5	114.3	3.5	88.9	4.12	105	3.88	98	4	102
4×2 1/2	4.5	114.3	2.88	73	4.12	105	3.75	95	4	102
4×2	4.5	114.3	2.38	60.3	4.12	105	3.5	89	4	102
4×1 1/2	4.5	114.3	1.9	48.3	4.12	105	3.38	86	4	102
4×1 1/4	4.5	114.3	1.66	42.2	4.12	105	-	-	4	102
4×1	4.5	114.3	1.32	33.4	4.12	105	-	-	4	102

沧州傲森迪克管件制造有限公司

CANGZHOU AUTHENTIC PIPE-FITTING MANUFACTURING CO.,LTD.

Wrought Steel Buttwelding Fittings(ASME)
Reducing Tees and Concentric & Eccentric Reducers

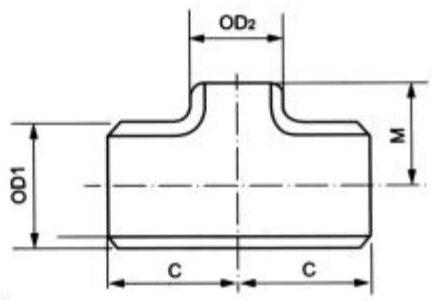

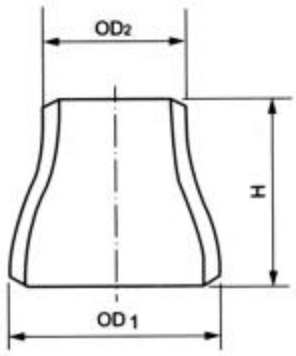

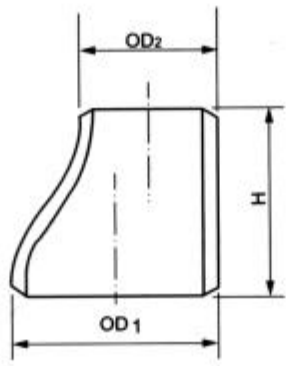

ANSI B16.9

Nominal pipe size(NPS)	Outside Diameter at Bevel				Center-to-End				End-to-End	
	OD1		OD2		C		M(1)		H	
	IN	MM	IN	MM	IN	MM	IN	MM	IN	MM
5×4	5.56	141.3	4.5	114.3	4.88	124	4.62	117	5	127
5×3½	5.56	141.3	4	101.6	4.88	124	4.5	114	5	127
5×3	5.56	141.3	3.5	88.9	4.88	124	4.38	111	5	127
5×2½	5.56	141.3	2.88	73	4.88	124	4.25	108	5	127
5×2	5.56	141.3	2.38	60.3	4.88	124	4.12	105	5	127
5×1½	5.56	141.3	1.9	48.3	4.88	124	*	*	5	127
5×1¼	5.56	141.3	1.66	42.2	4.88	124	*	*	5	127
6×5	6.62	168.3	4.56	141.3	5.62	143	5.38	137	5.5	140
6×4	6.62	168.3	4.5	114.3	5.62	143	5.12	130	5.5	140
6×3½	6.62	168.3	4	101.6	5.62	143	5	127	5.5	140
6×3	6.62	168.3	3.5	88.9	5.62	143	4.88	124	5.5	140
6×2½	6.62	168.3	2.88	73	5.62	143	4.75	121	5.5	140
6×2	6.62	168.3	2.38	60.3	5.62	143	*	*	5.5	140
8×6	8.62	219.1	6.62	168.3	7	178	6.62	168	6	152
8×5	8.62	219.1	5.56	141.3	7	178	6.38	162	6	152
8×4	8.62	219.1	4.5	114.3	7	178	6.12	156	6	152
8×3½	8.62	219.1	4	101.6	7	178	6	152	6	152
8×3	8.62	219.1	3.5	88.9	7	178	*	*	6	152
10×8	10.75	273	8.62	219.1	8.5	216	8	203	7	178
10×6	10.75	273	6.62	168.3	8.5	216	7.62	194	7	178
10×5	10.75	273	5.56	141.3	8.5	216	7.5	191	7	178
10×4	10.75	273	4.5	114.3	8.5	216	7.25	184	7	178
10×3	10.75	273	3.5	88.9	8.5	216	*	*	7	178
12×10	12.75	323.8	10.75	273	10	254	9.5	241	8	203
12×8	12.75	323.8	8.62	219.1	10	254	9	229	8	203
12×6	12.75	323.8	6.62	168.3	10	254	8.62	219	8	203
12×5	12.75	323.8	5.56	141.3	10	254	8.5	216	8	203
12×4	12.75	323.8	4.5	114.3	10	254	*	*	8	203
14×12	14	355.6	12.75	323.8	11	279	10.62	270	13	330
14×10	14	355.6	10.75	273	11	279	10.12	257	13	330
14×8	14	355.6	8.62	219.1	11	279	9.75	248	13	330
14×6	14	355.6	6.62	168.3	11	279	9.38	238	13	330
14×5	14	355.6	5.56	141.3	11	279	*	*	13	330
16×14	16	406.4	14	355.6	12	305	12	305	14	356
16×12	16	406.4	12.75	323.8	12	305	11.62	295	14	356
16×10	16	406.4	10.75	273	12	305	11.12	283	14	356
16×8	16	406.4	8.62	219.1	12	305	10.75	273	14	356
16×6	16	406.4	6.62	168.3	12	305	10.38	264	14	356
18×16	18	457	16	406.4	13.5	343	13	330	15	381

NOTE:Outlet dimensions M for run sizes NPS 14 and larger is recommended but not required.

技术参数
Technical parameters

Wrought Steel Buttwelding Fittings(ASME)
Reducing Tees and Concentric & Eccentric Reducers

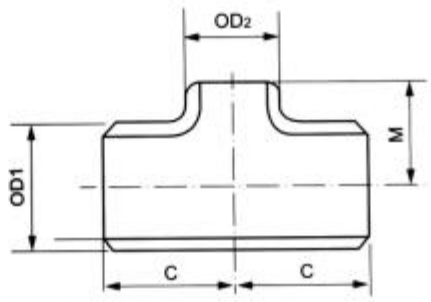

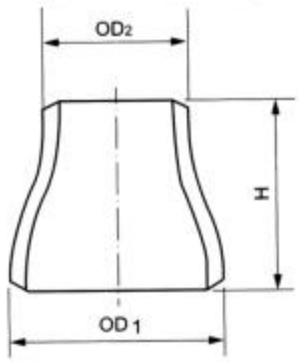

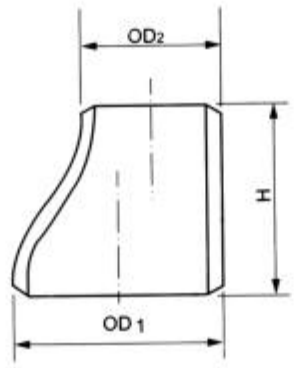

ANSI B16.9

Nominal pipe size (NPS)	Outside Diameter at Bevel				Center-to-End				End-to-End	
	OD1		OD2		C		M(1)		H	
	IN	MM	IN	MM	IN	MM	IN	MM	IN	MM
18×14	18	457	14	355.6	13.5	343	13	330	15	381
18×12	18	457	12.75	323.8	13.5	343	12.62	321	15	381
18×10	18	457	10.75	273	13.5	343	12.12	308	15	381
18×8	18	457	8.62	219.1	13.5	343	11.75	298	15	381
20×18	20	508	18	457.2	15	381	14.5	368	20	508
20×16	20	508	16	406.4	15	381	14	356	20	508
20×14	20	508	14	355.6	15	381	14	356	20	508
20×12	20	508	12.75	323.8	15	381	13.62	346	20	508
20×10	20	508	10.75	273	15	381	13.12	333	20	508
20×8	20	508	8.62	219.1	15	381	12.75	324	20	508
22×20	22	559	20	508	16.5	419	16	406	20	508
22×18	22	559	18	457.2	16.5	419	15.5	394	20	508
22×16	22	559	16	406.4	16.5	419	15	381	20	508
22×14	22	559	14	355.6	16.5	419	15	381	20	508
22×12	22	559	12.75	323.8	16.5	419	14.62	371	20	508
22×10	22	559	10.75	273	16.5	419	14.12	359	20	508
24×22	24	610	22	558.8	17	432	17	432	20	508
24×20	24	610	20	508	17	432	17	432	20	508
24×18	24	610	18	457.2	17	432	16.5	419	20	508
24×16	24	610	16	406.4	17	432	16	406	20	508
24×14	24	610	14	355.6	17	432	16	406	20	508
24×12	24	610	12.75	323.8	17	432	15.62	397	20	508
24×10	24	610	10.75	273	17	432	15.12	384	20	508
26×24	26	660	24	609.6	19.5	495	19	483	24	610
26×22	26	660	22	558.6	19.5	495	18.5	470	24	610
26×20	26	660	20	508	19.5	495	18	457	24	610
26×18	26	660	18	457.2	19.5	495	17.5	444	24	610
26×16	26	660	16	406.4	19.5	495	17	432	24	610
26×14	26	660	14	355.6	19.5	495	17	432	24	610
26×12	26	660	12.75	323.8	19.5	495	16.62	422	24	610
28×26	28	711	26	660.4	20.5	52	20.5	521	24	610
28×24	28	711	24	609.6	20.5	152	20	508	24	610
28×22	28	711	22	558.8	20.5	152	19.5	495	24	610
28×20	28	711	20	508	20.5	1521	19	483	24	610
28×18	28	711	18	457.2	20.5	521	18.5	470	24	610
28×16	28	711	16	406.4	20.5	521	18	457	24	610
28×14	28	711	14	355.6	20.5	521	18	457	24	610
28×12	28	711	12.75	323.8	20.5	521	17.62	448	24	610
30×28	30	762	28	711.2	22	559	21.5	546	24	610

NOTE:
(1) Outlet dimensions M for run sizes NPS 14 and larger is recommended but not required.

沧州傲森迪克管件制造有限公司

CANGZHOU AUTHENTIC PIPE-FITTING MANUFACTURING CO.,LTD.

Wrought Steel Buttwelding Fittings(ASME)
Reducing Tees and Concentric & Eccentric Reducers

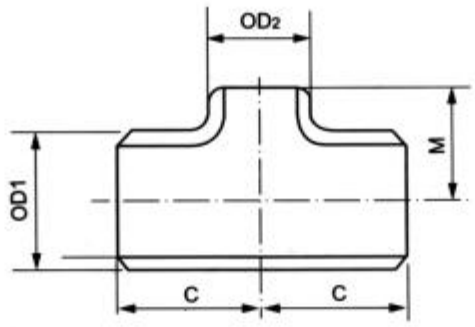

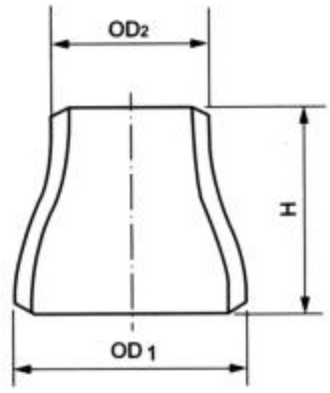

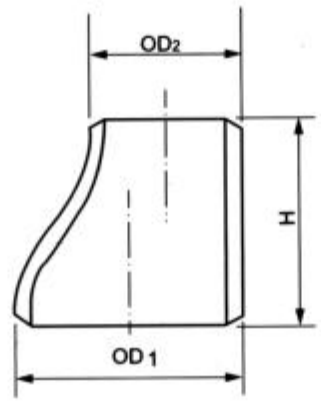

ASME B16.9

Nominal Pipe Size(NPS)	Outside Diameter at Bevel				Center-to-End				End-to-End	
	OD1		OD2		C		M(1)		H	
	IN	MM	IN	MM	IN	MM	IN	MM	IN	MM
30×26	30	762	26	660.4	22	559	21.5	546	24	610
30×24	30	762	24	609.6	22	559	21	533	24	610
30×22	30	762	22	558.8	22	559	20.5	521	24	610
30×20	30	762	20	508	22	559	20	508	24	610
30×18	30	762	18	457.2	22	559	19.5	495	24	610
30×16	30	762	16	406.4	22	559	19	483	24	610
30×14	30	762	14	355.6	22	559	19	483	24	610
30×12	30	762	12.75	323.8	22	559	18.62	473	24	610
30×10	30	762	10.75	273	22	559	18.12	460	24	610
32×30	32	813	30	762	23.5	597	23	584	24	610
32×28	32	813	28	711.2	23.5	597	22.5	572	24	610
32×26	32	813	26	660.4	23.5	597	22.5	572	24	610
32×24	32	813	24	609.6	23.5	597	22	559	24	610
32×22	32	813	22	558.8	23.5	597	21.5	546	24	610
32×20	32	813	20	508	23.5	597	21	533	24	610
32×18	32	813	18	457.2	23.5	597	20.5	521	24	610
32×16	32	813	16	406.4	23.5	597	20	508	24	610
32×14	32	813	14	355.6	23.5	597	20	508	24	610
34×32	34	864	32	812.8	25	635	24.5	622	24	610
34×30	34	864	30	762	25	635	24	610	24	610
34×28	34	864	28	711.2	25	635	23.5	597	24	610
34×26	34	864	26	660.4	25	635	23.5	597	24	610
34×24	34	864	24	609.6	25	635	23	584	24	610
34×22	34	864	22	558.8	25	635	22.5	572	24	610
34×20	34	864	20	508	25	635	22	559	24	610
34×18	34	864	18	457.2	25	635	21.5	546	24	610
34×16	34	864	16	406.4	25	635	21	533	24	610
36×34	36	914	34	863.6	26.5	673	26	660	24	610
36×32	36	914	32	812.8	26.5	673	25.5	648	24	610
36×30	36	914	30	762	26.5	673	25	635	24	610
36×28	36	914	28	711.2	26.5	673	24.5	622	24	610
36×26	36	914	26	660.4	26.5	673	24.5	622	24	610
36×24	36	914	24	609.6	26.5	673	24	610	24	610
36×22	36	914	22	558.8	26.5	673	23.5	597	24	610
36×20	36	914	20	508	26.5	673	23	584	24	610
36×18	36	914	18	457.2	26.5	673	22.5	572	24	610
36×16	36	914	16	406.4	26.5	673	22	559	24	610
38×36	38	965	36	914.4	28	711	28	711	24	610
38×34	38	965	34	863.6	28	711	27.5	698	24	610

NOTE:

(1) Outlet dimensions M for run sizes NPS 14 and larger is recommended but not required.

傲森迪克管件
AUTHENTIC
PIPE-FITTING
诚信赢天下 合力建未来
Good faith wins the world and builds the future together

技术参数
Technical parameters

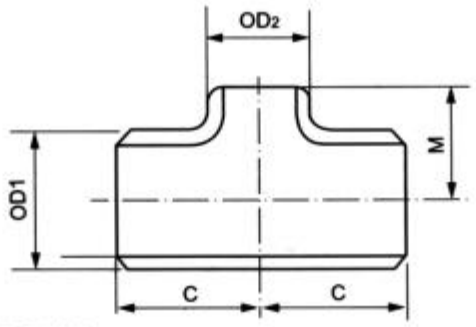

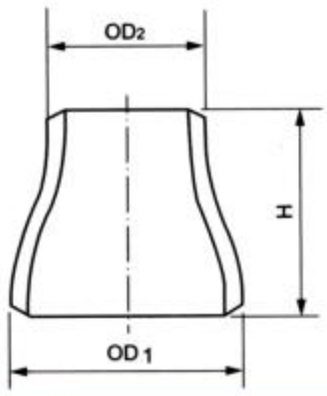

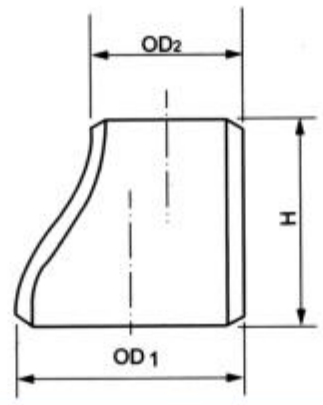

ASME B16.9

Nominal Pipe Size(NPS)	Outside Diameter at Bevel				Center-to-End				End-to-End	
	OD1		OD2		C		M(1)		H	
	IN	MM	IN	MM	IN	MM	IN	MM	IN	MM
38×32	38	965	32	812.8	28	711	27	686	24	610
38×30	38	965	30	762	28	711	26.5	673	24	610
38×28	38	965	28	711.2	28	711	25.5	648	24	610
38×26	38	965	26	660.4	28	711	25.5	648	24	610
38×24	38	965	24	609.6	28	711	25	635	24	610
38×22	38	965	22	558.8	28	711	24.5	622	24	610
38×20	38	965	20	508	28	711	24	610	24	610
38×18	38	965	18	457.2	28	711	23.5	597	24	610
40×38	40	1016	38	965.2	29.5	749	29.5	749	24	610
40×36	40	1016	36	914.4	29.5	749	29	737	24	610
40×34	40	1016	34	863.6	29.5	749	28.5	724	24	610
40×32	40	1016	32	812.8	29.5	749	28	711	24	610
40×30	40	1016	30	762	29.5	749	27.5	698	24	610
40×28	40	1016	28	711.2	29.5	749	26.5	673	24	610
40×26	40	1016	26	660.4	29.5	749	26.5	673	24	610
40×24	40	1016	24	609.6	29.5	749	26	660	24	610
40×22	40	1016	22	558.8	29.5	749	25.5	648	24	610
40×20	40	1016	20	508	29.5	749	25	635	24	610
40×18	40	1016	18	457.2	29.5	749	24.5	622	24	610
42×40	42	1067	40	1016	30	762	28	711	24	610
42×38	42	1067	38	965.2	30	762	28	711	24	610
42×36	42	1067	36	914.4	30	762	28	711	24	610
42×34	42	1067	34	863.6	30	762	28	711	24	610
42×32	42	1067	32	812.8	30	762	28	711	24	610
42×30	42	1067	30	762	30	762	28	711	24	610
42×28	42	1067	28	711.2	30	762	27.5	698	24	610
42×26	42	1067	26	660.4	30	762	27.5	698	24	610
42×24	42	1067	24	609.6	30	762	26	660	24	610
42×22	42	1067	22	558.8	30	762	26	660	24	610
42×20	42	1067	20	508	30	762	26	660	24	610
42×18	42	1067	18	457.2	30	762	25.5	648	24	610
42×16	42	1067	16	406.4	30	762	25	635	24	610
44×42	44	1118	42	1066.8	32	813	30	762	24	610
44×40	44	1118	40	1016	32	813	29.5	749	24	610
44×38	44	1118	38	965.2	32	813	29	737	24	610
44×36	44	1118	36	914.4	32	813	28.5	724	24	610
44×34	44	1118	34	863.6	32	813	28.5	724	24	610
44×32	44	1118	32	812.8	32	813	28	711	24	610
44×30	44	1118	30	762	32	813	28	711	24	610

NOTE:
(1) Outlet dimensions M for run sizes NPS 14 and larger is recommended but not required.

沧州傲森迪克管件制造有限公司

CANGZHOU AUTHENTIC PIPE-FITTING MANUFACTURING CO.,LTD.

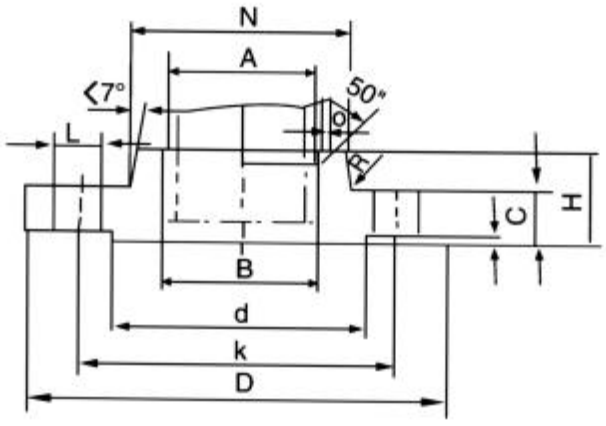

HGJ46-91PM1.0MPa(mm)

凸面带径平焊法兰（mm）

公称通径	管子外径	连接尺寸				六角头螺栓、螺柱			密封面尺寸		法兰厚度	法兰外径	法兰颈		法兰高度	坡口宽度	法兰理论重量
		法兰外径	螺栓孔中心圆直径	螺栓孔直径	螺栓孔数量	螺纹	螺栓长度	螺栓长度									
DN	A	D	K	L	n	Th	l	l	d	f_1	C	B	N	R	H	b	(kg)
10	14	90	60	14	4	M12	50	65	40	2	14	15	30	3	20		0.57
15	18	95	65	14	4	M12	50	65	45	2	14	19	35	3	20		0.64
20	25	105	75	14	4	M12	55	70	58	2	16	26	45	4	24		0.93
25	32	115	85	14	4	M12	55	70	68	2	16	33	52	4	24		1.10
32	38	140	100	18	4	M16	60	80	78	2	16	39	60	5	24		1.61
40	45	150	110	18	4	M16	60	80	88	3	16	46	70	5	24		1.77
50	57	165	125	18	4	M16	65	85	102	3	18	59	84	5	26		2.38
65	76	185	145	18	4	M16	65	85	122	3	18	78	104	6	30		3.00
80	89	200	160	18	8	M16	70	90	138	3	20	91	118	6	34		3.74
100	108	220	180	18	8	M16	70	90	158	3	20	110	140	6	38		4.60
125	133	250	210	18	8	M16	70	95	188	3	22	135	168	6	44		6.56
150	159	285	240	22	8	M20	75	105	212	3	22	161	195	8	44		8.02
200	219	340	295	22	8	M20	80	105	268	3	24	222	246	8	44		9.89
250	273	395	350	22	12	M20	85	110	320	3	26	276	298	10	46		12.5
300	325	445	400	22	12	M20	85	110	370	4	26	328	350	10	46		14.0
350	377	505	460	22	16	M20	85	110	430	4	26	381	400	10	53		17.3
400	426	565	515	26	16	M24	90	120	482	4	26	430	456	10	57		22.3
450	480	615	565	26	20	M24	95	125	532	4	28	485	502	12	63	12	24.0
500	530	670	620	26	20	M24	95	125	585	4	28	535	559	12	67	12	29.8
600	630	780	725	30	20	M27	95	130	685	5	28	636	658	12	73	12	36.3

注：用户对坡口形式有特殊要求，可按用户与制造厂达成的协议加工。

Note:The bevel can be made according to the special requirements of the customers.

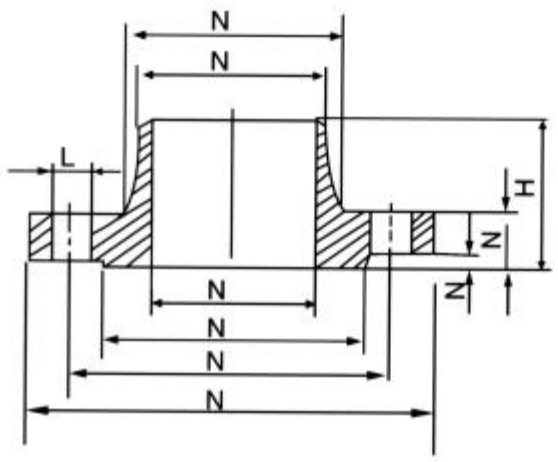

GB9115.13-88PN5.0MPa(50bar)

凸面对焊钢制管法兰（mm）

公称通径	法兰焊端外径(管子外径)	连接尺寸						密封面		法兰厚度	法兰高度	法兰颈	法兰内径
		法兰外径	螺栓孔中心圆直径	螺栓孔径	螺栓								
					数量	螺纹							
D	A	D	K	L	n	Th	d	f	C	H	N	B
15	21.5	95	66.5	16	4	M14	34.9	2	14.5	52	38	16.0
20	26.5	120	82.5	20	4	M18	42.9	2	16.0	57	48	21.0
25	33.5	125	89.5	20	4	M18	50.8	2	17.5	62	54	26.5
32	42.0	135	98.5	20	4	M18	63.5	2	19.5	65	64	35.0
40	48.5	155	114.5	22	4	M20	73.0	2	21.0	68	70	41.0
50	60.5	165	127.0	20	8	M18	92.1	2	22.5	70	84	52.5
65	73.0	190	149.0	22	8	M20	104.8	2	25.5	76	100	62.5
80	89.0	210	168.5	22	8	M20	127.0	2	29.0	79	118	78.0
100	114.5	255	200.0	22	8	M20	157.2	2	32.0	86	146	102.5
125	141.5	280	235.0	22	8	M20	185.7	2	35.0	98	178	128.0
150	168.5	320	270.0	22	12	M20	215.9	2	37.0	98	206	154.0
200	219.0	380	330.0	26	12	M24	269.9	2	41.5	111	260	202.5
250	273.0	445	387.5	30	16	M27	323.8	2	48.0	117	321	254.5
300	324.0	520	451.0	33	16	M30	381.0	2	51.0	130	375	305.0
350	355.5	585	514.5	33	20	M30	412.8	2	54.0	143	426	由用户规定
400	406.5	650	571.5	36	20	M33	469.9	2	57.5	146	483	
450	457.0	710	628.5	36	24	M33	533.4	2	60.5	159	533	
500	508.0	775	686.0	36	24	M33	284.2	2	63.5	162	587	
600	609.5	915	813.0	42	24	M39	692.2	2	70.0	168	702	

傲森迪克管件
AUTHENTIC
PIPE-FITTING
诚信赢天下 合力建未来
Good faith wins the world and builds the future together

技术参数
Technical parameters

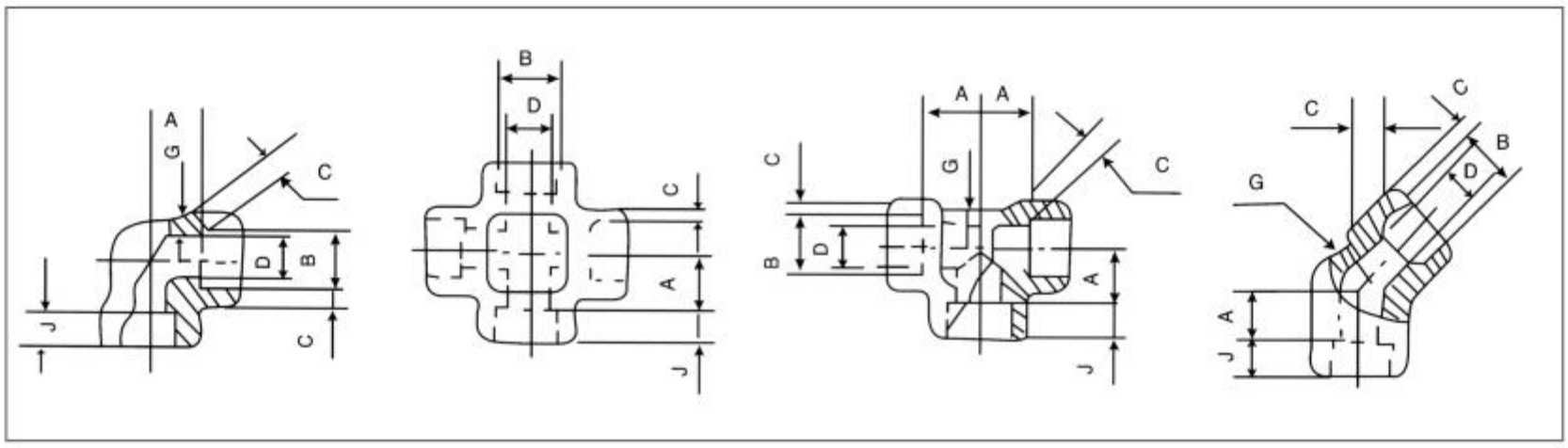

钢制承插焊管件 STEEL SOCKET-WELDING FITTINGS

90° 弯头（90° Elbows） 四通（Crosses）三通（Tees）45° 弯头（45° Elbows）

公称直径 Nominal Pipe Size DN		接管外径 Outside diameter	B		D				C		A				G		J	理论重量 Approx Weight（kg）			
					压力等级 Pressure Class Designation																
					5000ibs		6000ibs		3000 ibs	6000 ibs	3000ibs		6000ibs		3000ibs	6000ibs		3000ibs		6000ibs	
mm	in	B	max	min	max	min	max	min			max	min	max	min	min	min	min	三通 Tees	弯头 Elbows	三通 Tees	弯头 Elbows
15	1 /2	21.3	22.0	21.7	16.6	15.0	12.5	11.0	4.65	5.95	17	14	21	18	3.8	4.8	10	0.32	0.21	0.53	0.63
20	3 /4	26.7	27.3	27.1	21.7	20.2	16.3	14.8	5.90	6.95	21	18	24	21	3.9	5.6	13	0.48	0.34	0.81	0.56
25	1	33.4	34.1	33.8	27.4	25.9	21.5	19.9	5.70	7.90	24	20	29	25	4.6	6.4	13	0.85	0.48	1.6	0.92
32	1.1/4	42.2	42.8	42.6	35.8	34.3	30.2	28.7	6.05	7.90	29	25	34	30	4.9	6.4	13	1.1	0.82	2.00	1.41
40	1.1/2	48.3	48.9	48.7	41.7	40.1	34.7	33.2	6.35	8.90	34	30	40	36	5.1	7.2	13	1.8	1.14	2.8	1.9
50	2	60.3	61.4	61.0	53.5	51.7	43.6	42.1	6.95	10.9	40	36	43	39	5.6	11.2	16	2.6	1.89	4.0	3.3
65	2.1/2	73.0	74.2	73.8	64.2	61.2	-	-	8.75	-	44	39	-	-	7.0	-	16	4.2	3.44	-	-
80	3	88.9	90.2	89.8	79.5	76.4	-	-	9.50	-	60	55	-	-	7.6	-	16	6.7	5.97	-	-

注：用户对坡口形式有特殊要求，可按用户与制造厂达成的协议加工。
Note:The bevel can be made according to the special requirements of the customers.

沧州傲森迪克管件制造有限公司

CANGZHOU AUTHENTIC PIPE-FITTING MANUFACTURING CO.,LTD.

Tolerances for Fittings acc.toGB12459
（Elbows Reducers Tees Caps）

管件公差符合GB12459
弯头　异径管　三通　管帽

GB12459											
All Fittings 所有管件				45°，90° Elbows and Tees 45°，90° 弯头、三通	Reducers 异径管	Caps 管帽	180° Returns 180° 回转管			Angularity 斜度公差	
Nominal Pipe Size 公称尺寸	Outside Diameter at Bevel 坡品处外径	Inside Diameter at End 端面处内径	Wall Thickness 壁厚	Center to End Dimension 中心至端面尺寸	Overall Length 全长	Overall Highth 全高	Center to Center Dimension 中心至中心尺寸	Back to Face Dimension 顶端至端面尺寸	Alignment Of End 端面的平面度	Off Angle 角的	Off Plane 平面的
DN	D		T	H.F.C.M	L	E.E	P	K	U	X	Y
15 to 65	+1.6,-1.8	±0.8	Not less than 87.5% of nominal thickness 不小于公称壁厚的87.5%	±2	±2	±4	±7	±7	1	1	2
80 to 100	±1.6	±1.6		±2	±2	±4	±7	±7	1	1	2
125 to 300	+2.4,-1.6	±1.6		±2	±2	±4	±7	±7	1	2	4
250 to 300	+4.0,-3.2	±3.2		±3	±3	±7	±10	±7	2	3	5
350 to 400	+4.0,-3.2	±3.2		±3	±3	±7	±10	±7	2	3	7
450	+6.4,-4.8	±3.2		±3	±3	±7	±10	±7	2	4	10
500	+6.4,-4.8	±4.8		±3	±3	±7	±10	±7	2	4	10

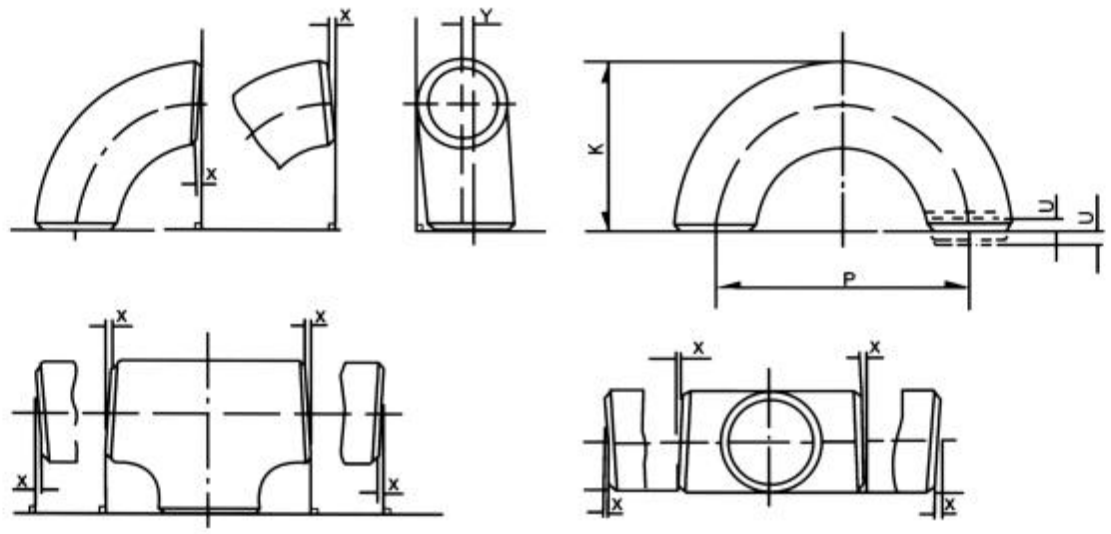

管件坡口形式 FITTINGS WEIKING BEVEL

Tolerances:mm　公差单位:mm

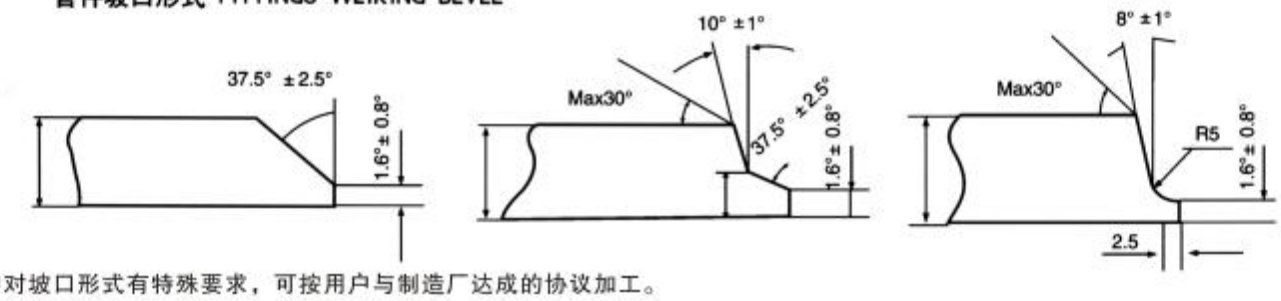

注：用户对坡口形式有特殊要求，可按用户与制造厂达成的协议加工。

Note:The bevel can be made according to the special requirements of the customers.

傲森迪克管件
AUTHENTIC
PIPE-FITTING
诚信赢天下 合力建未来
Good faith wins the world and builds the future together

技术参数
Technical parameters

适用品种 Kinds / 检验项目 Inspection contents	公称尺寸 Nominal pipe size (in)	JIS B2311					ASME/ANSI B16.9 B16.28				
		$\frac{1}{2}-2\frac{1}{2}$	3-4	5-8	10-18	20-24	$\frac{1}{2}-2\frac{1}{2}$	3-4	5-8	10-18	20-24
所有管件 All Fittings	坡口处外径 Outside diameter at bevel (D)	±2.0	±2.5	±3.5	±5.0 -4.5	+6.4 -4.8	+1.52 -0.76	±1.52	+2.29 -1.52	+4.06 -3.05	+6.35 -4.83
	端面的内径 Inside diameter at end	±2.0	±2.5	±3.5	±4.5	±4.8	±0.76	±1.52	±1.52	±3.05	±4.83
	壁 厚 Wall thickness (T)	-15%					-12.5%				
45°C 90°C 弯头、三通 Elbows Tees	中心到端面的距离 Center to face (ABCM)	±2.0		±3.2			±1.52			±2.29	
异径管 Reducers	长 度 Length (H)	±2.0		±3.2							
管 帽 Caps	全 高 Overall length (E)	±3.2		±6.5			±3.05		±6.35		
180°C 弯头 Elbows	中心到中心距离 Center to center (P)	±6.4		±9.5			±6.35			±9.65	
	背面端面距离 Back to face (K)	±6.4					±6.35				
	端面到端面的偏移 Deflection of face to face (U)	1.6		3.2			±0.76			±1.52	

Tolerances：mm　　公差尺寸：mm

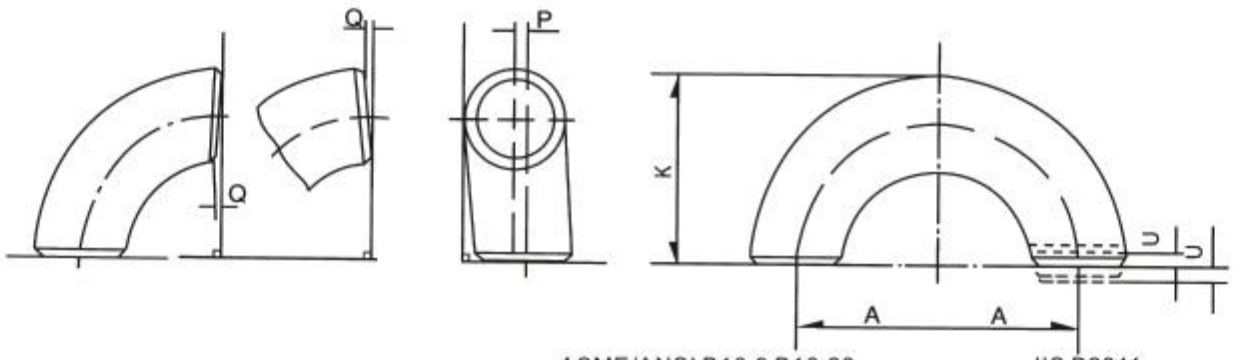

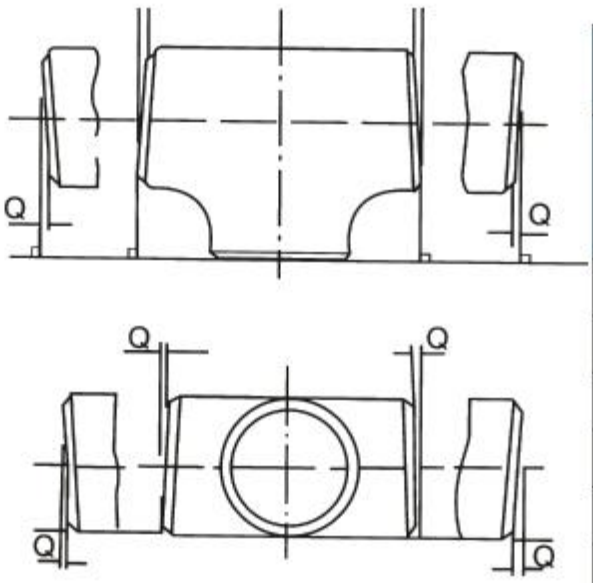

ASME/ANSI B16.9 B16.28

Angularity Tolerance 斜度公差		
Nominal Pipe Size 公称尺寸	Off Angle 角的	Off Plane 平面的
(in)	Q	P
1 /2 to 4	0.76	1.52
5 to 8	1.52	3.05
10 to 12	2.29	4.83
14 to 16	2.29	6.35
18 to 24	3.05	9.65

JIS B2311

Angularity Tolerance 斜度公差		
Nominal Pipe Size 公称尺寸	Off Angle 角的	Off Plane 平面的
(in)	Q	P
1 /2 to 4	0.8	1.6
5 to 8	1.6	3.2
10 to 12	2.4	4.8
14 to 16	2.4	6.4
18 to 24	3.2	9.5

注：用户对坡口形式有特殊要求，可按用户与制造厂达成的协议加工。
Note:The bevel can be made according to the special requirements of the customers.

产品展示
PRODUCT DISPLAY



傲森迪克管件
AUTHENTIC
PIPE-FITTING
诚信赢天下 合力建未来
Good faith wins the world and builds the future together

技术参数
Technical parameters

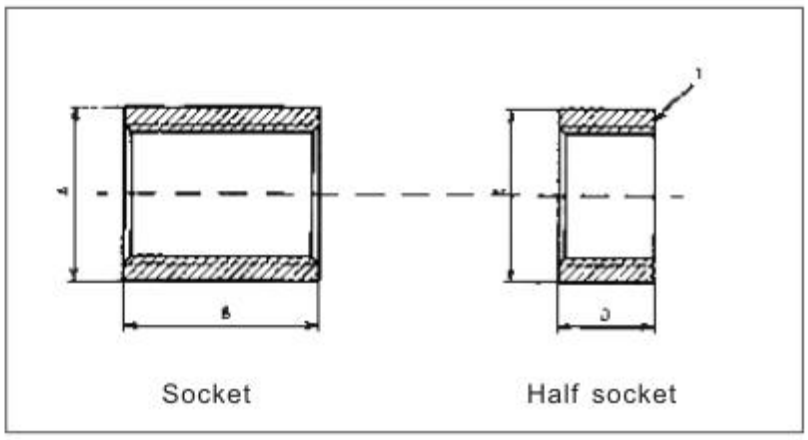





Pipe hoops

管箍

Nominal size	O.D.	Length	O.D.	Length
DN	A mm	B mm	C mm	D mm
6	15.0	17	15.0	8
8	18.5	25	18.5	11
10	21.3	26	21.3	12
15	26.6	34	26.6	15
20	31.8	36	31.8	17
25	39.0	43	39.5	20
32	48.3	48	48.3	22
40	54.5	48	54.5	22
50	66.2	56	68.0	26
65	82.0	65	84.2	30
80	95.0	71	98.4	34
100	121.4	83	124.0	40
125	146.3	92	149.0	44
150	173.3	92	177.0	44

沧州傲森迪克管件制造有限公司

CANGZHOU AUTHENTIC PIPE-FITTING MANUFACTURING CO.,LTD.

муфтой Материап: Стапь ГОСТ8969-75



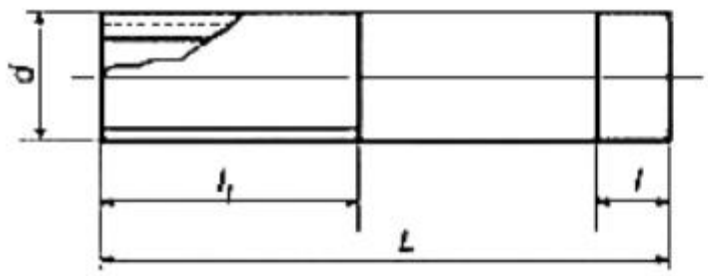

D	L,MM	I1,MM	I,MM	Macca,kr
15	110	40	9. 0	0. 094
20	110	45	10. 5	0. 134
25	130	50	11. 0	0. 243
32	130	53	13. 0	0. 336
40	150	60	15. 0	0. 463
50	150	65	17. 0	0. 608

2:Резьба-зто Детапь трубопровода,с одной стороны имеющая короткий участок внешней резьбы, с другой стороны соединение с трубой ироизводят иутем сварки. Изготавпиваются из водогазопроводной трубы по ГОСТ 3262-75. Они нашпи широкое применение дпя соединения труб хоподного и горячего водоснабжения. Основным достоинством резьбы явпяется низкая цена и простота монтажа.





D	L,MM	I,MM	Macca,kr
15	50	9. 0	0.070
20	50	10. 5	0.075
25	50	11. 0	0.140
32	60	13. 0	0.190
40	60	15. 0	0.270
50	70	17. 0	0.380

газоводопроводной трубы по ГОСТ 3262-75.



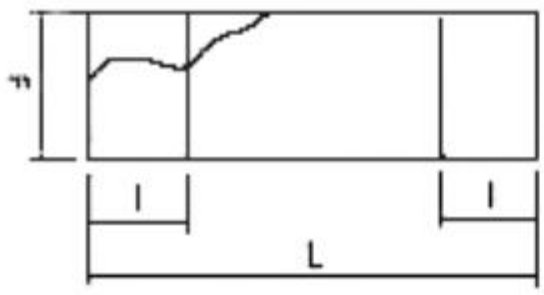

Усповный проход Dy, Резьба l, Сгроительная дпинна L,MM.Bec,ktr			
15	9. 0	55	0. 049
20	10. 5	55	0. 070
25	11. 0	70	0. 127
32	13. 0	70	0. 176
40	15. 0	75	0. 3
50	17. 0	75	0. 397

4:Муфта стальная предстапяет собой метаппическую трубку с внутренней трубной резьбой,что позвопяет стяпивать концы стыкуемых труб вращением самой муфты в одном направпении.Муфты стальные применяются в химической отраспи, в нефтедобывающей обласги и машиностроении, в системах отчистки воды и в строитеиьстве.



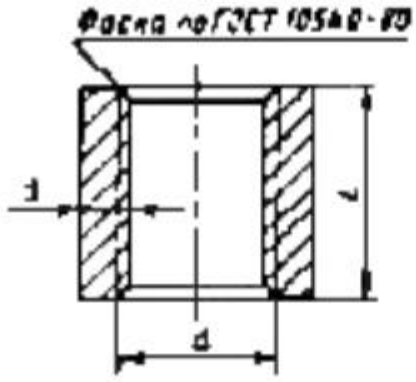

D усповный,MM	L,MM	Топшрота станки,MM	Bec,kr
ДУ15	34	4	0.06
ДУ20	36	4	0.09
ДУ25	43	5	0.14
ДУ32	48	5	0.20
ДУ40	48	5	0.22
ДУ50	56	5	0.32

技术参数
Technical parameters

CLASS 150–300 FLANGES
JIP 7S–15–84& ANSI 16.5

SLIP-ON • SOCKET-WELDING

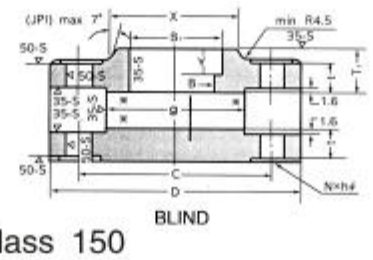

WELDING-NECK

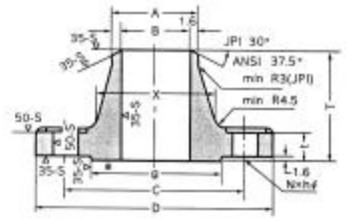

FLANGE

法兰

Class 150

Unit:mm

Nominal pipe size		Outside Dia. Of Flanges	Dia. of Bore										Dia.of Hub at Bevel A		Dia.of Hub at Base	Dia.of Raised Face	Thick of Flanges	Radius of Fillet
			Slip–on Socket,B1		Lap–Joint B2		Welding–Neck,Socket B											
							JPI			ANSI								
A	B	D	JPI	ANSI	JPI	ANSI	SCH40	SCH80	SCH160	SCH40	SCH80	SCH160	JPI	ANSI	X	g	t	r_3
15	1/2	89	22.2	22.4	23.4	22.9	16.1	14.3	12.3	15.8	13.9	11.8	21.7	21.3	30.2	35.1	11.2	3
20	3/4	98	27.7	27.7	28.9	28.2	21.4	19.4	16.2	20.9	18.8	15.6	27.2	26.7	38.1	42.9	12.7	3
25	1	108	34.5	34.6	35.6	35.1	27.2	25.0	21.2	26.6	24.3	20.7	34.0	33.5	49.3	50.8	14.3	3
(32)	(1 1/4)	117	43.2	43.2	44.3	43.7	35.5	32.9	29.9	35.1	32.5	29.5	42.7	42.2	58.7	63.5	15.9	5
40	1 1/2	127	49.1	49.6	50.4	50.0	41.2	38.4	34.4	40.9	38.1	34.0	48.6	48.3	65.0	73.2	17.5	6
50	2	152	61.1	62.0	62.7	62.5	52.7	49.5	43.1	52.5	49.3	42.9	60.5	60.5	77.8	91.9	19.1	8
65	2 1/2	178	77.1	74.7	78.7	75.5	65.9	62.3	57.3	62.7	59.0	54.0	76.3	73.2	90.4	104.6	22.3	8
80	3	191	90.0	90.7	91.6	91.4	78.1	73.9	66.9	77.9	73.7	66.7	89.1	88.9	108.0	127.0	23.9	10
(90)	(3 1/2)	216	102.6	103.4	104.1	104.2	90.2	85.4	76.2	90.1	85.5	–	101.6	101.6	122.2	139.7	23.9	10
100	4	229	115.4	116.1	116.9	116.9	102.3	97.1	87.3	102.3	97.2	87.3	114.3	114.3	134.9	157.2	23.9	11
(125)	(5)	254	141.2	143.8	143.0	144.6	126.6	120.8	108.0	128.2	122.3	109.6	139.8	141.2	163.6	185.7	23.9	11
150	6	279	166.6	170.7	168.4	171.5	151.0	143.2	128.8	154.1	146.3	131.8	165.2	168.4	192.1	215.9	25.4	13
200	8	343	218.0	221.5	219.5	222.3	199.9	190.9	170.3	202.7	193.7	173.1	216.3	219.2	246.1	269.7	28.6	13
250	10	406	269.5	276.4	271.7	277.4	248.8	237.2	210.2	254.4	242.9	215.9	267.4	273.1	304.8	323.9	30.2	13
300	12	483	321.0	327.2	322.8	328.2	297.9	283.7	251.9	303.3	288.9	257.2	318.5	323.9	365.1	381.0	31.8	13
350	14	533	358.1	359.2	–	360.2	333.4	317.6	284.2	333.3	317.5	284.2	355.6	355.6	400.1	421.8	35.0	13
400	16	597	409.0	410.5	–	411.3	381.0	363.6	325.4	381.0	363.6	325.5	406.4	406.4	457.2	469.9	36.6	13
450	18	635	460.0	461.8	–	462.4	428.6	409.6	366.8	428.7	409.6	366.7	457.2	457.2	504.8	533.4	39.7	13
500	20	699	511.0	513.1	–	514.4	477.8	455.6	408.0	477.8	455.6	408.0	508.0	508.0	558.8	584.2	42.9	13
600	24	815	613.0	616.0	–	616.0	574.6	547.8	490.6	574.7	547.7	490.6	609.6	609.6	663.6	692.2	47.7	13

Class 300

Unit:mm

Nominal pipe size		Outside Dia.of Flanges	Dia. of Bore										Dia.of Hub at Bevel A		Dia.of Hub at Base	Dia.of Raised Face	Thick of Flanges	Radius of Fillet
			Slip–on Socket,B1		Lap–Joint B2		Welding–Neck,Socket B											
							JPI			ANSI								
A	B	D	JPI	ANSI	JPI	ANSI	SCH40	SCH80	SCH160	SCH40	SCH80	SCH160	JPI	ANSI	X	g	t	r_3
15	1/2	95	22.2	22.4	23.4	22.9	16.1	14.3	12.3	15.8	13.9	11.8	21.7	21.3	38.1	35.1	14.3	3
20	3/4	117	27.7	27.7	28.9	28.2	21.4	19.4	16.2	20.9	18.8	15.6	27.2	26.7	47.6	42.9	15.9	3
25	1	124	34.5	34.6	35.6	35.1	27.2	25.0	21.2	26.6	24.3	20.7	34.0	33.5	54.0	50.8	17.5	3
(32)	(1 1/4)	133	43.2	43.2	44.3	43.7	35.5	32.9	29.9	35.1	32.5	29.5	42.7	42.2	63.5	63.5	19.1	5
40	1 1/2	156	49.1	49.6	50.4	50.0	41.2	38.4	34.4	40.9	38.1	34.0	48.6	48.3	69.9	73.2	20.6	6
50	2	165	61.1	62.0	62.7	62.5	52.7	49.5	43.1	52.5	49.3	42.9	60.5	60.5	84.1	91.9	22.4	8
65	2 1/2	191	77.1	74.7	78.7	75.5	65.9	62.3	57.3	62.7	59.0	54.0	76.3	73.2	100.0	104.6	25.4	8
80	3	210	90.0	90.7	91.6	91.4	78.1	73.9	66.9	77.9	73.7	66.7	89.1	88.9	117.5	127.0	28.6	10
(90)	(3 1/2)	229	102.6	103.4	104.1	104.2	90.2	85.4	76.2	90.1	85.5	–	101.6	101.6	133.4	139.7	30.2	10
100	4	254	115.4	116.1	116.9	116.9	102.3	97.1	87.3	102.3	97.2	87.3	114.3	114.3	146.1	157.2	31.8	11
(125)	(5)	279	141.2	143.8	143.0	144.6	126.6	120.8	108.0	128.2	122.3	109.6	139.8	141.2	177.8	185.7	35.1	11
150	6	318	166.6	170.7	168.4	171.5	151.0	143.2	128.8	154.1	146.3	131.8	165.2	168.4	206.4	215.9	36.6	13
200	8	381	218.0	221.5	219.5	222.3	199.9	190.9	170.3	202.7	193.7	173.1	216.3	219.2	260.4	269.7	41.3	13
250	10	445	269.5	276.4	271.7	277.4	248.8	237.2	210.2	254.4	242.9	215.9	267.4	273.1	320.7	323.9	47.8	13
300	12	521	321.0	327.2	322.8	328.2	297.9	283.7	251.9	303.2	288.9	257.2	318.5	323.9	374.7	381.0	50.8	13
350	14	584	358.1	359.2	–	360.2	333.4	317.6	284.2	333.3	317.5	284.2	355.6	355.6	425.5	421.8	54.0	13
400	16	650	409.0	410.5	–	411.3	381.0	363.6	325.4	381.0	363.6	325.5	406.4	406.4	482.6	469.9	57.2	13
450	18	710	460.0	461.8	–	462.4	428.6	409.6	366.8	428.7	409.6	366.7	457.2	457.2	533.4	533.4	60.4	13
500	20	775	511.0	513.1	–	514.4	477.8	455.6	408.0	477.8	455.6	408.0	508.0	508.0	587.4	584.2	63.5	13
600	24	914	613.0	616.9	–	616.0	574.6	547.8	490.6	574.7	547.7	490.6	609.6	609.6	701.7	692.2	69.9	13

傲森迪克管件
AUTHENTIC
PIPE-FITTING
诚信赢天下 合力建未来
Good faith wins the world and builds the future together

THREADED LAP-JOINT

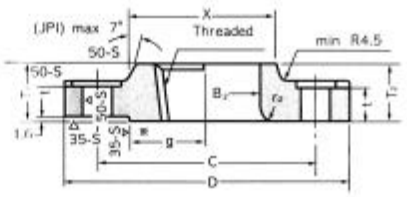

RING-JOINT

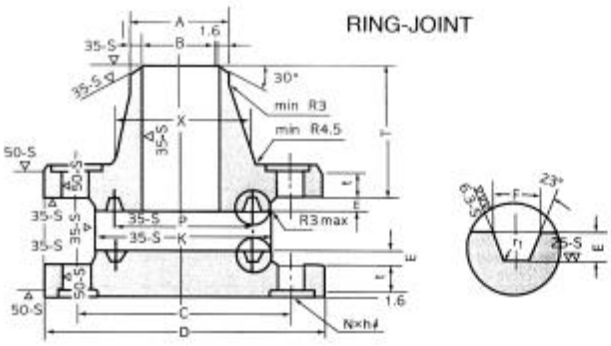

Class 150

Unit:mm

Length Thru Hub			Depth of Socket	Drilling			Dia.of Raised Face for Ring Joint	Pitch Dia.of Ring & Groove	Ring N0.	RTJ Type			Approx. Weight(kg)				Nominal Pipe Size	
Slip-on Socket Thread	Lap Joint	Welding Neck		Dia.of Bolt Circle	Number of Bolt	Dia.of Bolt Hole				Depth of Groove	Width of Groove	Radius of Groove	W.N	S.O	S.W	B.L		
T_1	T_2	T	Y	C	N	h	K(min)	P		E	F	r_1					A	B
15.9	15.9	47.6	9.5	60.5	4	16	–	–	–	–	–	–	0.50	0.41	0.42	0.43	15	1/2
15.9	15.9	52.4	11.1	70.0	4	16	–	–	–	–	–	–	0.75	0.57	0.58	0.62	20	3/4
17.5	17.5	55.6	12.7	79.5	4	16	63.5	47.62	R15	6.35	8.74	0.8	1.02	0.78	0.80	0.87	25	1
20.6	20.6	57.1	14.3	89.5	4	16	73.0	57.15	R17	6.35	8.74	0.8	1.33	1.03	1.06	1.16	(32)	(1 1/4)
22.2	22.2	61.9	15.9	98.5	4	16	82.5	69.07	R19	6.35	8.74	0.8	1.72	1.32	1.35	1.54	40	1 1/2
25.4	25.4	63.5	17.5	120.5	4	19	102	82.55	R22	6.35	8.74	0.8	2.59	2.09	2.13	2.46	50	2
28.6	28.6	69.8	19.0	139.5	4	19	121	101.60	R25	6.35	8.74	0.8	4.06	3.25	3.35	3.99	65	2 1/2
30.2	30.2	69.8	20.6	152.5	4	19	133	114.30	R29	6.35	8.74	0.8	4.95	3.91	4.02	4.98	80	3
31.8	31.8	71.4	22.2	178.0	8	19	154	131.78	R33	6.35	8.74	0.8	6.08	4.86	4.99	6.20	(90)	(3 1/2)
33.3	33.3	76.2	23.8	190.5	8	19	171	149.22	R36	6.35	8.74	0.8	6.91	5.35	5.99	7.05	100	4
36.5	36.5	88.9	23.8	216.0	8	22	194	171.45	R40	6.35	8.74	0.8	8.75	6.22	6.68	8.67	(125)	(5)
39.7	39.7	88.9	27.0	241.5	8	22	219	193.68	R43	6.35	8.74	0.8	10.8	7.76	7.99	11.3	150	6
44.5	44.5	101.6	31.8	298.5	8	22	273	247.65	R48	6.35	8.74	0.8	18.0	12.6	13.29	19.9	200	8
49.2	49.2	101.6	33.3	362.0	12	25	330	304.80	R52	6.35	8.74	0.8	24.9	17.6	19.50	29.0	250	10
55.6	55.6	114.3	39.7	432.0	12	25	406	381.00	R56	6.35	8.74	0.8	38.6	27.8	29.03	43.7	300	12
57.2	*79.3	127.0	41.3	476.0	12	29	425	396.88	R59	6.35	8.74	0.8	50.6	35.2	38.56	58.6	350	14
63.5	*87.4	127.0	44.5	539.5	16	29	483	454.02	R64	6.35	8.74	0.8	63.9	45.3	44.49	76.6	400	16
68.3	*96.8	139.7	49.2	578.0	16	32	546	517.52	R68	6.35	8.74	0.8	74.9	49.7	54.43	94.5	450	18
73.0	*103.1	144.5	54.0	635.0	20	32	597	558.80	R72	6.35	8.74	0.8	93.5	63.5	70.31	123	500	20
82.6	*111.3	152.4	63.5	749.5	20	35	711	673.10	R76	6.35	8.74	0.8	133	90.5	95.25	188	600	24

Class 300

Unit:mm

Length Thru Hub			Depth of Socket	Drilling			Dia.of Raised Face for Ring Joint	Pitch Dia.of Ring & Groove	Ring N0.	RTJ Type			Approx. Weight(kg)				Nominal Pipe Size	
Slip-on Socket Thread	Lap Joint	Welding Neck		Dia.of Bolt Circle	Number of Bolt	Number of Bolt				Depth of Groove	Width of Groove	Radius of Groove	W.N	S.O	S.W	B.L		
T_1	T_2	T	Y	C	N	h	K(min)	P		E	F	r_1					A	B
22.2	22.2	52.4	9.7	66.5	4	16	51.0	34.14	R11	5.56	7.14	0.8	0.80	0.65	0.67	0.65	15	1/2
25.4	25.4	57.2	11.2	82.6	4	19	63.5	42.88	R13	6.35	8.74	0.8	1.25	1.10	1.12	1.09	20	3/4
27.0	27.0	61.9	12.7	88.9	4	19	70.0	50.80	R16	6.35	8.74	0.8	1.58	1.35	1.39	1.38	25	1
27.0	27.0	65.1	14.2	98.6	4	19	79.5	60.32	R18	6.35	8.74	0.8	2.05	1.69	1.74	1.82	(32)	(1 1/4)
30.2	30.2	68.3	15.8	114.3	4	22	90.5	68.28	R20	6.35	8.74	0.8	2.93	2.54	2.60	2.70	40	1 1/2
33.3	33.3	69.8	17.5	127.0	8	19	108	82.55	R23	7.92	11.91	0.8	3.40	2.92	3.02	3.18	50	2
38.1	38.1	76.2	19.1	149.4	8	22	127	101.60	R26	7.92	11.91	0.8	5.10	4.24	4.43	4.86	65	2 1/2
42.9	43.9	79.4	20.6	168.1	8	22	146	123.82	R31	7.92	11.91	0.8	7.01	5.94	6.21	6.90	80	3
44.5	44.5	81.0	22.4	184.2	8	22	159	131.78	R34	7.92	11.91	0.8	8.71	7.90	–	8.79	(90)	(3 1/2)
47.6	47.6	85.7	23.9	200.2	8	22	175	149.22	R37	7.92	11.91	0.8	11.3	9.71	–	11.6	100	4
50.8	50.8	98.4	23.9	235.0	8	22	210	180.98	R41	7.92	11.91	0.8	15.1	12.4	–	15.5	(125)	(5)
52.4	52.4	98.4	26.9	269.7	12	22	241	211.12	R45	7.92	11.91	0.8	19.6	16.2	–	21.2	150	6
61.9	61.9	111.1	31.8	330.2	12	26	302	269.88	R49	7.92	11.91	0.8	30.3	24.8	–	34.5	200	8
66.7	95.3	117.5	33.3	387.3	16	29	356	323.85	R53	7.92	11.91	0.8	44.3	35.9	–	53.9	250	10
73.0	101.6	130.2	39.6	450.9	16	32	413	381.004	R57	7.92	11.91	0.8	64.1	51	–	78.9	300	12
76.2	111.3	142.9	41.4	514.4	20	32	457	419.10	R61	7.92	11.91	0.8	88.3	70.1	–	106	350	14
82.6	120.7	146.0	44.5	571.5	20	35	508	469.90	R65	7.92	11.91	0.8	113	90.4	–	139	400	16
89.9	130.0	158.8	49.3	628.7	24	35	575	533.40	R69	7.92	11.91	0.8	138	109	–	175	450	18
95.2	139.7	161.9	54.1	735.8	24	35	635	584.20	R73	9.52	13.49	1.5	169	136	–	222	500	20
100.4	152.4	168.3	63.5	812.8	24	42	749	692.15	R77	11.13	16.66	1.5	248	204	–	340	600	24

技术参数
Technical parameters

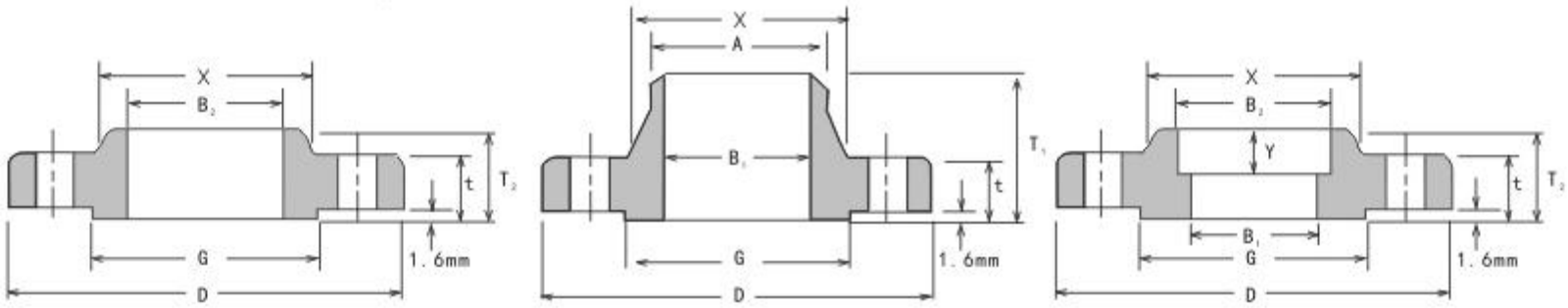

SLIP-ON　　WELDING NECK　　SOCKET WELDING

CLASS 600 FLANGES

ASME B16.5 FORGED FLANGES　　ASME B16.5

Nominal Pipe Size	Outside Diam.	Diam. at Base of Hub	O.D.of Raised Face	Thickness	BORE				LENGTH THRU HUB					
					Welding Neck Socket Welding	Slip-on Socket Welding	Lap Joint	Counter Bore Min.	Welding Neck	Slip-on Threaded Socket Welding	Lap Joint	Diam.of Hub at Bevel	Radius of Fillet	Thread Length
	D	x	G	t	B1	B2	B3	B	T1	T2	T3	A	R	Q
1/2	95.3	38.1	35.1	14.2	See Note(1) To be specified by purchaser.	22.4	22.9	23.6	52.3	22.4	22.4	21.3	3.0	16.0
3/4	117.3	48.0	42.9	15.7		27.7	28.2	29.0	57.2	25.4	25.4	26.7	3.0	16.0
1	124.0	54.0	50.8	17.5		34.5	35.1	35.8	62.0	26.9	26.9	33.5	3.0	18.0
1 1/4	133.4	64.0	63.5	20.6		43.2	43.7	44.5	67.0	29.0	29.0	42.2	5.0	21.0
1 1/2	155.4	70.0	73.2	22.4		49.5	50.0	50.5	69.9	32.0	32.0	48.3	6.0	23.0
2	165.1	84.1	91.9	25.4		62.0	62.5	63.5	73.2	37.0	37.0	60.5	8.0	29.0
2 1/2	190.5	100.1	104.6	28.6		74.7	75.4	76.2	79.2	41.1	41.1	73.2	8.0	32.0
3	209.6	117.3	127.0	31.8		90.7	91.4	92.2	83.0	46.0	46.0	88.9	10.0	35.0
3 1/2	228.6	133.4	139.7	35.1		103.4	104.1	104.9	86.0	49.3	49.3	101.6	10.0	40.0
4	273.1	152.4	157.2	38.1		116.1	116.8	117.6	102.0	54.0	54.0	114.3	11.0	42.0
5	330.2	189.0	185.7	44.5		143.8	144.5	144.4	114.3	60.5	60.5	141.2	11.0	48.0
6	355.6	222.3	215.9	47.8		170.7	171.5	171.4	117.3	67.0	67.0	168.4	13.0	51.0
8	419.1	273.1	269.7	55.6		221.5	222.3	222.3	133.4	76.2	76.2	219.2	13.0	58.0
10	508.0	342.9	323.9	63.5		276.4	277.4	276.4	152.4	86.0	111.3	273.1	13.0	66.0
12	558.8	400.1	381.0	66.7		327.2	328.2	328.7	156.0	92.0	117.3	323.9	13.0	70.0
14	603.3	432.0	412.8	69.9		359.2	360.2	360.4	165.1	94.0	127.0	355.6	13.0	74.0
16	685.8	495.3	469.9	76.2		410.5	411.2	411.2	178.0	106.4	140.0	406.4	13.0	78.0
18	743.0	546.1	533.4	82.6		461.8	462.3	462.0	184.2	117.3	152.4	457.2	13.0	80.0
20	812.8	610.0	584.2	88.9		513.1	514.4	512.8	190.5	127.0	165.1	508.0	13.0	83.0
24	939.8	718.0	692.2	101.6		616.0	616.0	614.4	203.2	140.0	184.2	609.6	13.0	93.0

Notes

(1)Classl600 flanges except Lap Joint will be furnished with 0.25'(6.35mm)raised face,which is not included in 'Thickness' (t)and 'Length through Hub' (T1),(T2).

(2)For Slip-on,Threaded,Socket Welding and Lap Joint Flanges,the hubs can be shaped either vertical from base to top or tapered within the limits of 7 degrees.

傲森迪克管件
AUTHENTIC
PIPE-FITTING
诚信赢天下 合力建未来
Good faith wins the world and builds the future together

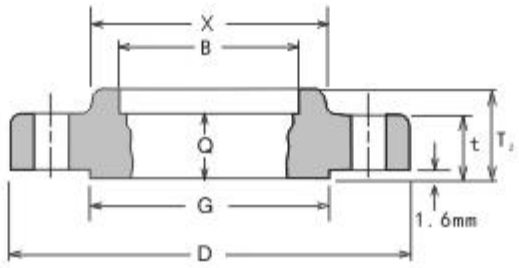

THREADED

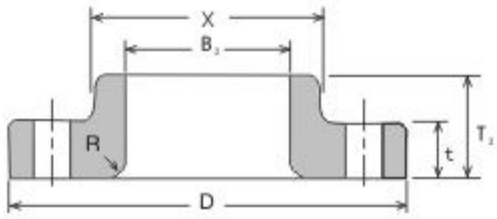

LAP JOINT

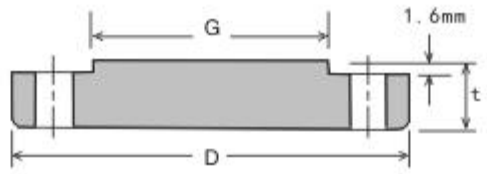

BLIND

CLASS 600 FLANGES

ASME B16.5 FORGED FLANGES

ASME B16.5

Nominal Pipe Size	Depth of Socket	DRILLING			BOLTING				APPROXIMATE WEIGHT									
					Diam of Bolt (inch)	Stud Bolt Length			Welding Neck		Slip-on and Threaded		Lap Joint		Blind		Socket Welding	
	Y	Bolt Circle Diam.	Number of Holes	Diam of Holes		0.25' Raised Face	Male-Female Tongue Groove	Ring Joint	Kg	lb	Kg	lb	Kg	lb	Kg	lb	Kg	lb
1/2	9.7	66.7	4	15.8	1/2	75	70	75	1.36	2.00	0.75	2.00	0.76	1.80	0.77	2.00	0.75	2.00
3/4	11.2	82.6	4	19.1	5/8	90	85	90	1.59	3.50	1.35	3.00	1.38	3.00	1.37	3.00	1.35	3.00
1	12.7	88.9	4	19.1	5/8	90	85	90	1.82	4.00	1.58	3.70	1.62	3.50	1.66	4.00	1.58	4.00
1 1/4	14.2	98.6	4	19.1	5/8	95	90	95	2.5	5.50	2.15	5.00	2.23	4.50	2.36	5.30	2.15	5.70
1 1/2	15.7	114.3	4	22.2	3/4	110	100	110	3.63	8.00	2.99	6.80	3.09	6.50	3.29	7.50	2.99	7.00
2	17.5	127.5	8	19.1	5/8	110	100	110	4.54	10.00	3.71	8.00	3.85	8.00	4.24	9.70	3.71	8.60
2 1/2	19.1	149.4	8	22.2	3/4	120	115	120	6.36	14.00	5.2	12.00	5.5	11.00	6.23	15.00	5.2	13.00
3	20.6	168.1	8	22.2	3/4	125	120	125	8.17	18.00	7.13	16.00	7.44	14.00	8.63	19.60	7.13	16.30
3 1/2	22.4	184.2	8	25.4	7/8	140	135	140	12.00	26.00	9.53	21.00	9.40	20.00	13.17	29.00		
4	23.9	215.9	8	25.4	7/8	145	140	145	16.8	37.00	14.9	33.00	15.4	31.00	17.7	41.00		
5	23.9	266.7	8	28.4	1	165	160	165	30.9	68.00	24.6	62.80	25.1	60.60	29.4	68.00		
6	26.9	292.1	12	28.4	1	170	165	170	33.1	80.00	28.7	80.00	29.8	78.00	36.2	83.80		
8	31.8	349.3	12	31.8	1 1/8	190	185	190	50.9	112.00	43.5	97.00	45.2	112.00	59.1	137.00		
10	33.3	431.8	16	35.1	1 1/4	215	210	215	85.8	190.00	70.9	168.00	80.2	163.00	98.4	224.90		
12	39.6	489.0	20	35.1	1 1/4	220	215	220	102.6	226.00	84.5	215.00	97.1	240.00	125.3	291.00		
14	41.4	527.1	20	38.1	1 3/8	235	230	235	157.5	268.00	99.3	224.80	116.2	244.70	152.1	348.30		
16	44.5	603.3	20	41.1	1 1/2	255	250	255	218.4	290.00	141	330.20	164.2	365.30	214.1	495.40		
18	49.3	654.1	20	44.5	1 5/8	275	265	275	252	475.40	174.8	412.30	201.8	427.70	275.4	628.30		
20	54.1	723.9	24	44.5	1 5/8	285	280	290	313.3	590.50	221.8	510.50	257.5	570.50	352.4	804.70		
24	63.5	838.2	24	50.8	1 7/8	330	325	330	443.6	820.00	313.3	725.50	367.1	798.00	536.8	1176.0		

(3)Blind Flanges may be made with the same hub as that used for Slip-on Flanges or without hub.

(4)The gasket surface and backside(bearing surface for bolting)are made parallel within I degree.To accomplish parallelism,spot facing is carriedout according to MSS SP-9,without reducing thickness(t).

(5)Dimensions of size1/2'through31/2'are the same as tor Class400 Flanges.

(6)Dipth of Socket(Y)is covered by ANSI B16.5 only in sizes through 3 inch,over 3 inch is at the manufacturer's option.

沧州傲森迪克管件制造有限公司

CANGZHOU AUTHENTIC PIPE-FITTING MANUFACTURING CO.,LTD.

技术参数

Technical parameters

10BAR

DIN 2576 SLIP–ON FLANGES
DIN 2527 BLIND FLANGES
DIN 2632 WELDING NECK FLANGES

WELDING NECK

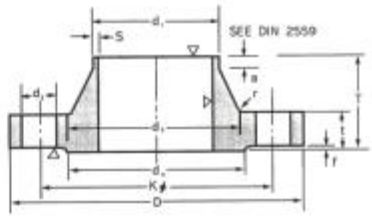

SLIP–ON

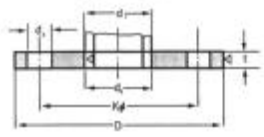

BLIND

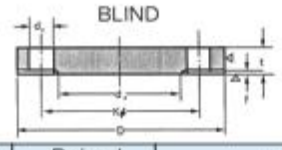

Unit:mm

Bore		Common Dimension						Hub				Raised Face		Drilling				Approx Weight(Kg)	
Nominal Bore	d1	D	t			k	T	d3	s	r	a ≈	d4	f	Number of Bolt	Dia.of Bolt		d2	DIN 2576	DIN 2632
			Welding Neck	Slip–on	Blind														
10	14 / 17.2*)	90	14	14	14	60	35	25 / 28	1.8	4	6	40	2	4	M12	(1/2")	14	0.163	0.580
15	20 / 21.3*)	95	14	14	14	65	35	30 / 32	2.0	4	6	45	2	4	M12	(1/2")	14	0.675	0.648
20	25 / 26.9*)	105	16	16	16	75	38	38 / 40	2.3	4	6	58	2	4	M12	(1/2")	14	0.947	0.952
25	30 / 33.7*)	115	16	16	16	85	38	42 / 45	2.6	4	6	68	2	4	M12	(1/2")	14	1.14	1.14
32	38 / 42.4*)	140	16	16	16	100	40	52 / 56	2.6	6	6	78	2	4	M16	(5/8")	18	1.66	1.69
40	44.5 / 48.3*)	150	16	16	16	110	42	60 / 64	2.6	6	7	88	3	4	M16	(5/8")	18	1.89	1.86
50	57 / 60.3*)	165	18	18	18	125	45	72 / 75	2.9	6	8	102	3	4	M16	(5/8")	18	2.51	2.53
65	76.1*)	185	18	18	18	145	45	90	2.9	6	10	122	3	4	M16	(5/8")	18	3.00	3.06
80	88.9*)	200	20	20	20	160	50	105	3.2	8	10	138	3	4	M16	(5/8")	18	3.79	3.70
100	108 / 114.3*)	220	20	20	20	180	52	125 / 131	3.6	8	12	158	3	8	M16	(5/8")	18	4.20	4.62
125	133 / 139.7*)	250	22	22	22	210	55	150 / 156	4.0	8	12	188	3	8	M16	(5/8")	18	5.71	6.30
150	159 / 168.3*)	285	22	22	22	240	55	175 / 184	4.5	10	12	212	3	8	M20	(3/4")	23	6.72	7.75
200	216 / 219.1*)	340	24	24	24	295	62	232 / 235	5.9	10	16	268	3	8	M20	(3/4")	23	9.50	11.3
250	267 / 273*)	395	26	26	26	350	68	285 / 292	6.3	12	16	320	3	12	M20	(3/4")	23	12.5	14.7
300	318 / 323.9*)	445	26	26	28	400	68	335 / 344	7.1	12	16	370	4	12	M20	(3/4")	23	14.4	17.6
350	355.6* / 368)	505	26	28	30	460	68	385	7.1	12	16	430	4	16	M20	(3/4")	23	20.6	21.4
400	406.4* / 419)	565	26	32	32	515	72	440	7.1	12	16	482	4	16	M24	(7/8")	27	27.9	26.1
500	508* / 521)	670	28	38	34	620	75	542	7.1	12	16	585	4	20	M24	(7/8")	27	41.1	34.7
600	609.6* / 622)	780	28			725	80	642	7.1	12	18	685	5	20	M27	(1")	30		
700	711.2* / 720)	895	30			840	80	745	8.0	12	18	800	5	24	M27	(1")	30		
800	812.8* / 820)	1015	32			950	90	850	8.0	12	18	905	5	24	M30	(1 1/8")	33		
900	914.4* / 920)	1115	34			1050	95	950	10.0	12	20	1005	5	28	M30	(1 1/8")	33		
1000	1016* / 1020)	1230	34			1160	95	1052	10.0	16	20	1110	5	28	M33	(1 1/4")	36		

NOTE*Out side diameter of pipe complies with ISO recommendation R64

傲森迪克管件
AUTHENTIC
PIPE-FITTING
诚信赢天下 合力建未来
Good faith wins the world and builds the future together

16BAR

DIN 2543 SLIP-ON FLANGES
DIN 2527 BLIND FLANGES
DIN 2633 WELDING NECK FLANGES

WELDING NECK

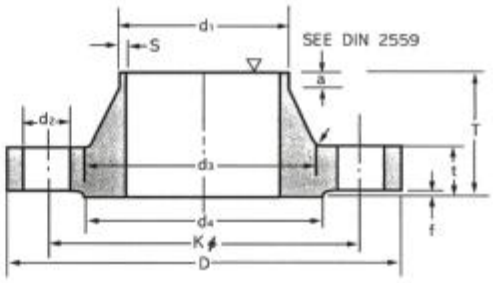

SLIP-ON

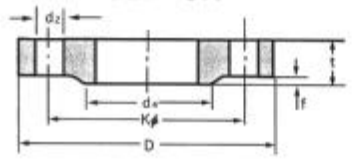

BLIND

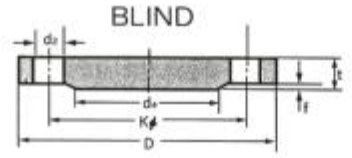

Unit: mm

Bore		Common Dimension						Hub				Raised Face		Drilling				Approx Weight(Kg)	
Nominal Bore	d1	D	t			k	T	d3	s	r	a ≈	d4	f	Number of Bolt	Dia.of Bolt		d2	DIN 2543	DIN 2633
			Welding Neck	Slip-on	Blind														
10	14 / 17.2*)	90	14		14	60	35	25 / 28	1.8	4	6	40	2	4	M12	(1/2")	14	0.63	0.580
15	20 / 21.3*)	95	14	14	14	65	35	30 / 32	2.0	4	6	45	2	4	M12	(1/2")	14	0.72	0.648
20	25 / 26.9*)	105	16	16	16	75	38	38 / 40	2.3	4	6	58	2	4	M12	(1/2")	14	1.01	0.952
25	30 / 33.7*)	115	16	16	16	85	38	42 / 45	2.6	4	6	68	2	4	M12	(1/2")	14	1.23	1.14
32	38 / 42.4*)	140	16	16	16	100	40	52 / 56	2.6	6	6	78	2	4	M16	(5/8")	18	1.80	1.69
40	44.5 / 48.3*)	150	16	16	16	110	42	60 / 64	2.6	6	7	88	3	4	M16	(5/8")	18	2.09	1.86
50	57 / 60.3*)	165	18	18	18	125	45	72 / 75	2.9	6	8	102	3	4	M16	(5/8")	18	2.88	2.53
65	76.1*)	185	18	18	18	145	45	90	2.9	6	10	122	3	4	M16	(5/8")	18	3.66	3.06
80	88.9*)	200	20	20	20	160	50	105	3.2	8	10	138	3	8	M16	(5/8")	18	4.77	3.70
100	108 / 114.3*)	220	20	20	20	180	52	125 / 131	3.6	8	12	158	3	8	M16	(5/8")	18	5.65	4.62
125	133 / 139.7*)	250	22	22	22	210	55	150 / 156	4.0	8	12	188	3	8	M16	(5/8")	18	8.42	6.30
150	159 / 168.3*)	285	22	22	22	240	55	175 / 184	4.5	10	12	212	3	8	M20	(3/4")	23	10.4	7.75
200	216 / 219.1*)	340	24	24	24	295	62	232 / 235	5.9	10	16	268	3	12	M20	(3/4")	23	16.1	11.0
250	267 / 273*)	405	26	26	26	355	70	285 / 292	6.3	12	16	320	3	12	M24	(7/8")	27	24.9	15.6
300	318 / 323.9*)	460	28	28	28	410	78	338 / 344	7.1	12	16	378	4	12	M24	(7/8")	27	35.1	22.0
350	355.6* / 368)	520	30	30	30	470	82	390	8.0	12	16	438	4	16	M24	(7/8")	27	47.8	28.7
400	406.4* / 419)	580	32	32	32	525	85	445	8.0	12	16	490	4	16	M27	(1")	30	63.5	36.3
500	508* / 521)	715	34	36	34	650	90	548	8.0	12	16	610	4	20	M30	(1 1/8")	33	102.0	59.3
600	609.6* / 622)	840	36	40		770	95	652	8.8	12	18	725	5	20	M33	(1 1/4")	36		
700	711.2* / 720)	910	36			840	100	755	8.8	12	18	795	5	24	M33	(1 1/4")	36		
800	812.8* / 820)	1025	38			950	105	855	10.0	12	20	900	5	24	M36	(1 3/8")	39		
900	914.4* / 920)	1125	40			1050	110	955	10.0	12	20	1000	5	28	M36	(1 3/8")	39		
1000	1016* / 1020)	1255	42			1170	120	1058	10.0	16	20	1115	5	28	M39	(1 1/2")	42		

NOTE*Out side diameter of pipe complies with ISO recommendation R64

技术参数
Technical parameters

LAPPED FLANGES WITH COLLAR
Nominal Pressure:25kgf/cm²–ND25
DIN 2655
FLANSILAR
BORULARICIN,DESTEKLIGEVSEK
Anma Basinc1:25kgf/cm²–ND25

TS 814/4 (TS ISO 7005–1)

BORU (Pipe)		FLANS (Flange)				CIVATALAR (Bolts)			DESTEK (Beam)			AGIRLIK(Weight) 7.85kg/dm³	
DN	d_1	D	d_3	b	k	Sayisi (Each)	Vida Screw	d_2	d_5	d_4	h_1	Flans (Flange) kg	Destek (Beam) kg
10 150	17.2 168.3	Degerler DIN 2656(40kgf/cm2)den alinmalidir											
200	219.1	360	225	26	310	12	M24	26	221.8	278	24	11.7	4.53
250	273	425	279	30	370	12	M27	30	276.2	335	26	17.9	6.56
300	323.9	485	329	34	430	16	M27	30	327.6	395	28	24.7	8.80
350	368	555	374	38	490	16	M30	33	372.2	450	32	35.6	13.2
400	419	620	426	42	550	16	M33	36	423.7	505	34	47.5	16.5
500	508	730	517	50	660	20	M33	36	513.6	615	38	71.1	25.3

LAPPED FLANGES WITH COLLAR
Nominal Pressure:40kgf/cm²–ND40
DIN 2656

FLANSILAR
BORULARICIN,DESTEKLI GEVSEK
Anma Basinc1:40kgf/cm²–ND40
TS 814/5 (TS ISO 7005–1)

BORU (Pipe)		FLANS (Flange)				CIVATALAR (Bolts)			DESTEK (Beam)			AGIRLIK(Weight) 7.85kg/dm³	
DN	d_1	D	d_3	b	k	Sayisi (Each)	Vida Screw	d_2	d_5	d_4	h_1	Flans (Flange) kg	Destek (Beam) kg
10	17.2	90	19	16	60	4	M12	14	17.7	40	12	0.696	0.104
15	21.3	95	24	16	65	4	M12	14	22	45	12	0.773	0.126
20	26.9	105	30	16	75	4	M12	14	27.6	58	14	0.934	0.236
25	33.7	115	36	18	85	4	M12	14	34.4	68	14	1.26	0.321
32	42.4	140	46	18	100	4	M16	18	43.1	78	14	1.85	0.401
40	48.3	150	54	18	110	4	M16	18	49	83	14	2.10	0.498
50	60.3	165	65	20	125	4	M16	18	61.1	102	16	2.75	0.706
65	76.1	185	81	20	145	8	M16	18	77.1	122	16	3.11	0.898
80	88.9	200	94	22	160	8	M16	18	90.3	138	18	3.88	1.23
100	114.3	235	119	22	190	8	M20	22	115.9	162	20	5.23	1.80
125	139.7	270	145	24	220	8	M24	26	141.6	188	22	7.23	2.40
150	168.3	300	173	24	250	8	M24	26	170.5	218	22	8.60	3.02
200	219.1	375	225	30	320	12	M27	30	221.8	285	26	15.2	5.54
250	273	450	279	36	385	12	M30	33	276.2	345	30	25.7	8.83
300	323.9	515	329	40	450	16	M30	33	327.6	410	34	33.5	14.0
350	368	580	374	46	510	16	M33	36	372.2	465	38	50.2	18.9
400	419	660	426	50	585	16	M36	39	423.7	535	42	71.2	28.4

DIN 25Bar

DIN 2503 Slip On Flange
DIN 2527 Blind Flange
DIN 2634 Welding Neck Flange

WELDING NECK

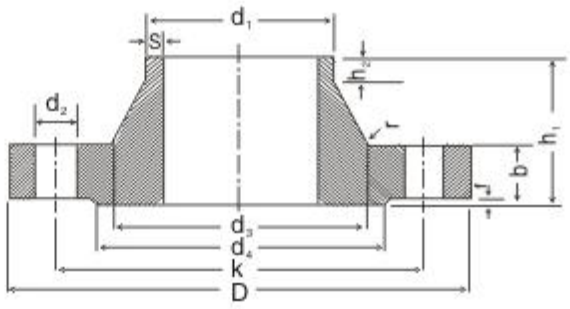

SLIP ON

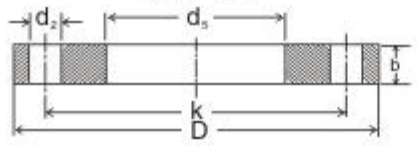

BLIND

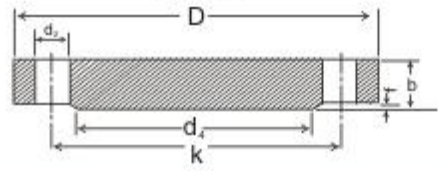

Bore			Common Dimension					Hub					Raised Face		Drilling		Approx. Weight (kg)		
DN	d_1	d_5	d	b			k	h_1	d_3	s	r	h_2	d_4	f	Number of Bolf	d_2	DIN 2503	DIN 2634	DIN 2527
				Welding neck	Slip On	Blind													
10	14	14.5	90	16	16	16	60	35	25	1.8	4	6	40	2	4	14	0.7	0.661	
	17.2	17.7							28										
15	20	21	95	16	16	16	65	38	30	2	4	6	45	2	4	14	0.771	0.746	
	21.3	22							32										
20	25	26	105	18	18	18	75	40	38	2.3	4	6	58	2	4	14	1	1.06	
	26.9	27.6							40										
25	30	31	115	18	18	18	85	40	42	2.6	4	6	68	2	4	14	1.28	1.29	
	33.7	34.4							46										
32	38	39	140	18	18	18	100	42	52	2.6	6	6	78	2	4	18	1.87	1.88	
	42.4	43.1							56										
40	44.5	45.5	150	18	18	18	110	45	60	2.6	6	7	88	3	4	18	2.13	2.33	
	48.3	49							64										
50	57	58.1	165	20	20	20	125	48	72	2.9	6	8	102	3	4	18	2.79	2.82	
	60.3	61.1							75										
65	76.1	77.1	185	22	22	22	145	52	90	2.9	6	10	122	3	8	18	3.48	3.74	4.33
80	88.9	90.3	200	24	24	24	160	58	105	3.2	8	12	138	3	8	18	4.35	4.75	5.94
100	108	109.6	235	24	24	24	190	65	128	3.6	8	12	162	3	8	22	5.78	6.52	7.64
	114.3	115.9							134										
125	133	134.8	270	26	26	26	220	68	155	4	8	12	188	3	8	26	7.87	9.07	11
	139.7	141.6							162										
150	159	161.1	300	28	28	28	250	75	182	4.5	10	12	218	3	8	26	10.1	11.8	14.7
	168.3	170.5							192										
175	191	193	330	28	28	28	280	75	215	5.6	10	15	248	3	12	26	11	13.4	17.6
	193.7	196							218										

技术参数
Technical parameters

DIN 2503 Slip On Flange
DIN 2527 Blind Flange
DIN 2634 Welding Neck Flange

WELDING NECK

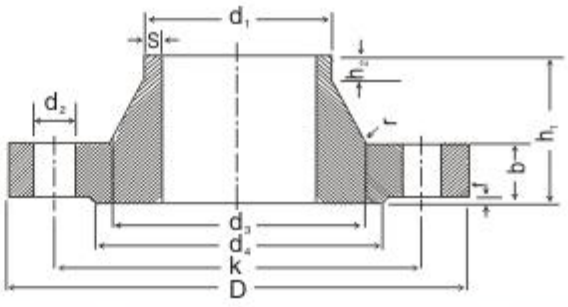

SLIP ON

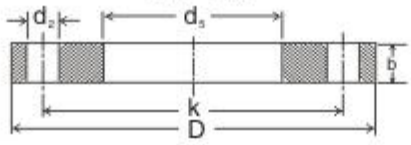

BLIND

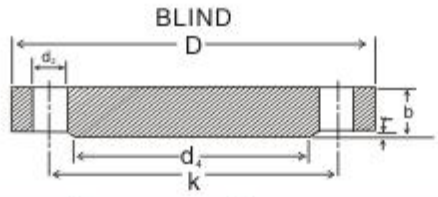

Bore			Common Dimension					Hub					Raised Face		Drilling		Approx. Weight (kg)		
DN	d_1	d_5	d	b			k	h_1	d_3	s	r	h_2	d_4	f	Number of Bolf	d_2	DIN 2503	DIN 2634	DIN 2527
				Welding neck	Slip On	Blind													
200	216	219	360	30	30	30	310	80	240	6.3	10	16	278	3	12	26	13.6	17	22.7
	219.1	221.8							244										
250	267	270	425	32	32	32	370	88	292	7.1	12	18	335	3	12	30	19.4	24.4	34.5
	273	276.2							298										
300	318	322	485	34	34	34	430	92	345	8	12	18	395	4	16	30	25	31.2	47.3
	323.9	327.6							352										
350	355.6	359.7	555	38	38	38	490	100	398	8	12	20	450	4	16	33	38.2	47.2	69.3
	368	372.2																44.2	
400	406.4	411	620	40	40	40	550	110	452	8.8	12	20	505	4	16	36	48.8	61.7	91.5
	419	423.7																57.9	
500	508	513.6	730	44	44	45	660	125	558	10	12	20	615	4	20	36	67.2	89.6	141
600	610	616.5	845	46	50		770	125	660	11	12	20	720	5	20	39	93.57	104	
700	711	716	960	46	52		875	125	760	12.5	20	24	820	5	24	42	117.53	136	
800	813	818	1085	50	56		990	135	865	14.2	22	24	930	5	24	48	156.31	186	
900	914	920	1185	54	62		1090	145	968	16	24	28	1030	5	28	48	188.57	236	
1000	1016	1022	1320	58	68		1210	155	1070	17.5	24	28	1140	5	28	56	255.97	307	

傲森迪克管件
AUTHENTIC
PIPE-FITTING
诚信赢天下 合力建未来
Good faith wins the world and builds the future together

DIN 40Bar

DIN 2503 Slip On Flange
DIN 2527 Blind Flange
DIN 2635 Welding Neck Flange

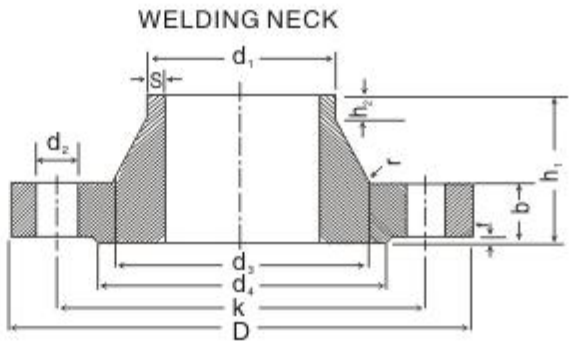

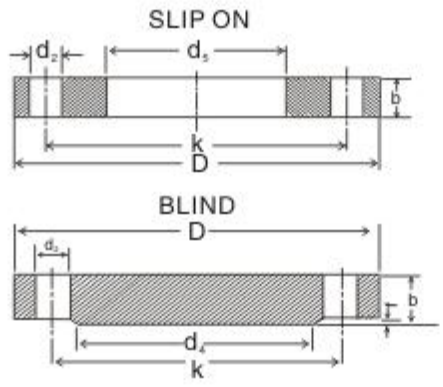

Bore			Common Dimension					Hub					Raised Face		Drilling		Approx. Weight (kg)		
DN	d_1	d_5	D	b			k	h_1	d_3	s	r	h_2	d_4	f	Number of Bolf	d_2	DIN 2503	DIN 2635	DIN 2527
				Welding neck	Slip On	Blind													
15	20	21	95	16	16	16	65	38	30	2	4	6	45	2	4	14	0.771	0.746	
	21.3	22							32										
20	25	26	105	18	18	18	75	40	38	2.3	4	6	58	2	4	14	1	1.06	
	26.9	27.6							40										
25	30	31	115	18	18	18	85	40	42	2.6	4	6	68	2	4	14	1.28	1.29	
	33.7	34.4							46										
32	38	39	140	18	18	18	100	42	52	2.6	6	6	78	2	4	18	1.87	1.88	
	42.4	43.1							56										
40	44.5	45.5	150	18	18	18	110	45	60	2.6	6	7	88	3	4	18	2.13	2.33	
	48.3	49							64										
50	57	58.1	165	20	20	20	125	48	72	2.9	6	8	102	3	4	18	2.79	2.82	
	60.3	61.1							75										
65	76.1	77.1	185	22	22	22	145	52	90	2.9	6	10	122	3	8	18	3.48	3.74	4.33
80	88.9	90.3	200	24	24	24	160	58	105	3.2	8	12	138	3	8	18	4.35	4.75	5.94
100	108	109.6	235	24	24	24	190	65	128	3.6	8	12	162	3	8	22	5.78	6.52	7.64
	114.3	115.9							134										
125	133	134.8	270	26	26	26	220	68	155	4	8	12	188	3	8	26	7.87	9.07	11
	139.7	141.6							162										
150	159	161.1	300	28	28	28	250	75	182	4.5	10	12	218	3	8	26	10.1	11.8	14.7
	168.3	170.5							192										
200	219.1	221.8	375	34	34	34	320	88	242	6.3	10	16	285	3	12	30	17.4	21.5	27.6
250	267	270.2	450	38	38	38	385	105	298	7.1	12	18	345	3	12	33	27.6	34.9	44.5
	273	276.2							306										
300	323.9	327.3	515	42	42	42	450	115	362	8	12	18	410	4	16	33	37.8	49.7	64.3
350	355.6	359.7	580	46	46	46	510	125	408	8.8	12	20	465	4	16	36	53.4	68.1	90.8
	368	372.2																	
400	406.4	411	660	50	50	50	585	135	462	11	12	20	535	4	16	39	75.4	96.5	129
	419	423.7																	
500	508	513.6	755	52	52	56	670	140	562	14.2	12	20	615	4	20	42	88.3	117	175

沧州傲森迪克管件制造有限公司

CANGZHOU AUTHENTIC PIPE-FITTING MANUFACTURING CO.,LTD.

技术参数

Technical parameters

5Kg/cm²

JIS B 2220–2004(KS B 1503–2007)

5Kg/cm² SLIP–ON WELDING STEEL PIPE FLANGES

SOP TYPE
NOMINAL SIZE 10-1000A

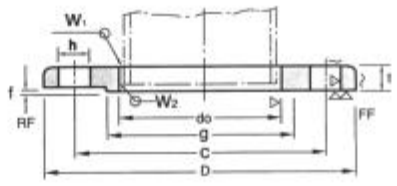

SOH TYPE
NOMINAL SIZE 450-1000A

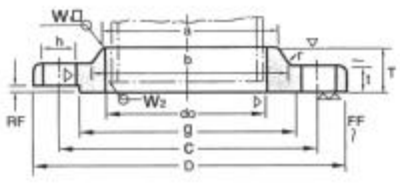

BL TYPE
NOMINAL SIZE 10-750A

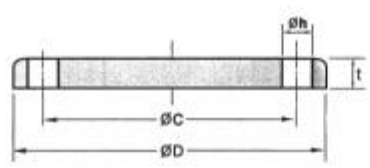

Unit：mm

Nominal Bore of Flange	Outside Diam.of Appli–cable Pipe	Inside Diam.of Flange do	Outside Diam.of Flange D	Sectional Dimensions of Flange							Dia.of Bolt			Nominal Bolt Size	Weight(Kg)		
				t	T	Diam.of Hub		Rad –ius r	Raised Face f	Diam.of Raised face g	Diam. of Bolt Circle C	Number of Bolt Holes	Hole Diam. h		SOP	BL	SOH
						a	b										
(10)	17.3	17.8	75	9	–	–	–	–	1	39	55	4	12	M10	0.26	0.28	–
15	21.7	22.2	80	9	–	–	–	–	1	44	60	4	12	M10	0.30	0.32	–
(20)	27.2	27.7	85	10	–	–	–	–	1	49	65	4	12	M10	0.36	0.41	–
25	34.0	34.5	95	10	–	–	–	–	1	59	75	4	12	M10	0.45	0.52	–
(32)	42.7	43.2	115	12	–	–	–	–	2	70	90	4	15	M12	0.77	0.91	–
40	48.6	49.1	120	12	–	–	–	–	2	75	95	4	15	M12	0.82	1.00	–
50	60.5	61.1	130	14	–	–	–	–	2	85	105	4	15	M12	1.06	1.38	–
65	76.3	77.1	155	14	–	–	–	–	2	110	130	4	15	M12	1.48	2.00	–
80	89.1	90.0	180	14	–	–	–	–	2	121	145	4	19	M16	1.97	2.67	–
(90)	101.6	102.6	190	14	–	–	–	–	2	131	155	4	19	M16	2.08	2.99	–
100	114.3	115.4	200	16	–	–	–	–	2	141	165	8	19	M16	2.35	3.66	–
125	139.8	141.2	235	16	–	–	–	–	2	176	200	8	19	M16	3.20	5.16	–
150	165.2	166.6	265	18	–	–	–	–	2	206	230	8	19	M16	4.39	7.47	–
(175)	190.7	192.1	300	18	–	–	–	–	2	232	260	8	23	M20	5.42	9.52	–
200	216.3	218.0	320	20	–	–	–	–	2	252	280	8	23	M20	6.24	12.1	–
(225)	241.8	243.7	345	20	–	–	–	–	2	277	305	12	23	M20	6.57	13.9	–
250	267.4	269.5	385	22	–	–	–	–	2	317	345	12	23	M20	9.39	19.2	–
300	318.5	321.0	430	22	–	–	–	–	3	360	390	12	23	M20	10.2	24.2	–
350	355.6	358.1	480	24	–	–	–	–	3	403	435	12	25	M22	14.0	33.0	–
400	406.4	409.0	540	24	–	–	–	–	3	463	495	16	25	M22	16.9	41.7	–
450	457.2	460.0	605	24	40	495	500	5	3	523	555	16	25	M22	21.4	52.7	24.9
500	508.0	511.0	655	24	40	546	552	5	3	573	605	20	25	M22	23.0	61.6	27.0
550	558.8	562.0	720	26	42	597	603	5	3	630	665	20	27	M24	30.1	80.8	34.5
600	609.6	613.0	770	26	44	648	654	5	3	680	715	20	27	M24	32.5	92.7	37.8
650	660.4	664.0	825	26	48	702	708	5	3	735	770	24	27	M24	35.6	106	43.2
700	711.2	715.0	875	26	48	751	758	5	3	785	820	24	27	M24	38.0	120	45.9
750	762.0	766.0	945	28	52	802	810	5	3	840	880	24	33	M30	48.4	150	57.7
800	812.8	817.0	995	28	52	854	862	5	3	890	930	24	33	M30	51.2	–	61.3
(850)	863.6	868.0	1045	28	54	904	912	5	3	940	980	24	33	M30	53.9	–	65.3
900	914.4	919.0	1095	30	56	956	964	5	3	990	1030	24	33	M30	60.7	–	73.1
1000	1016.0	1021.0	1195	32	60	1058	1066	5	3	1090	1130	28	33	M30	70.1	–	84.8
*(1100)	1117.6	1123	1305	32	–	–	–	–	3	1200	1240	28	33	M30	–	–	–
*1200	1219.2	1225	1420	34	–	–	–	–	3	1305	1350	32	33	M30	–	–	–
*1350	1371.6	–	1575	34	–	–	–	–	3	1460	1505	32	33	M30	–	–	–
*1500	1524.0	–	1730	36	–	–	–	–	3	1615	1660	36	33	M30	–	–	–

1、Flanges of parenthesized nominal diameter had letter not be used.
2、The facing of flanges shall conform to KS B 1509 (JIS B 2202) 1984.
3、Nominal diameter over 1000 is manufacturer' s standard (*)

傲森迪克管件
AUTHENTIC
PIPE-FITTING
诚信赢天下 合力建未来
Good faith wins the world and builds the future together

10Kg/cm²

JIS B 2220–2004(KS B 1503–2007)

10Kg/cm² SLIP–ON WELDING STEEL PIPE FLANGES

SOP TYPE
NOMINAL SIZE 10-800A

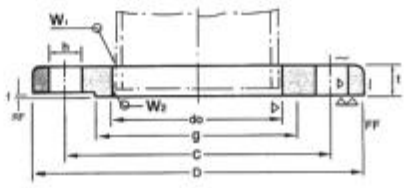

SOH TYPE
NOMINAL SIZE 250-1000A

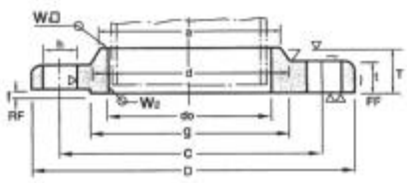

BL TYPE
NOMINAL SIZE 10-800A

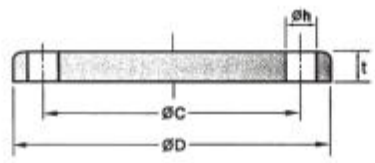

NORMAL THICKNESS FLANGE

Unit：mm

Nominal Diam .of Flange	Outside Diam.of Steel Pipe	Inside Diam.of Flange do	Outside Diam.of Flange D	Sectional Dimensions of Flange							Dia.Of Bolt			Nominal Bolt Size	Weight(Kg)		
				t	T	Diam.of Hub		Rad –ius r	Raised Face f	Diam.of Raised face g	Bolt Circle Diam. C	Number of Bolt Holes	Hole Dia. h		SOP	BL	SOH
						a	b										
10	17.3	17.8	90	12	–	–	–	–	1	46	65	4	15	M12	0.51	0.53	–
15	21.7	22.2	95	12	–	–	–	–	1	51	70	4	15	M12	0.56	0.60	–
20	27.2	27.7	100	14	–	–	–	–	1	56	75	4	15	M12	0.72	0.79	–
25	34.0	34.5	125	14	–	–	–	–	1	67	90	4	19	M16	1.12	1.22	–
32	42.7	43.2	135	16	–	–	–	–	2	76	100	4	19	M16	1.47	1.66	–
40	48.6	49.1	140	16	–	–	–	–	2	81	105	4	19	M16	1.55	1.79	–
50	60.5	61.1	155	16	–	–	–	–	2	96	120	4	19	M16	1.86	2.23	–
65	76.3	77.1	175	18	–	–	–	–	2	116	140	4	19	M16	2.58	3.24	–
80	89.1	90	185	18	–	–	–	–	2	126	150	8	19	M16	2.58	3.48	–
(90)	101.6	102.6	195	18	–	–	–	–	2	136	160	8	19	M16	2.73	3.90	–
100	114.3	115.4	210	18	–	–	–	–	2	151	175	8	19	M16	3.10	4.57	–
125	139.8	141.2	250	20	–	–	–	–	2	182	210	8	23	M20	4.73	7.18	–
150	165.2	166.6	280	22	–	–	–	–	2	212	240	8	23	M20	6.30	10.1	–
(175)	190.7	192.1	305	22	–	–	–	–	2	237	265	12	23	M20	6.75	11.8	–
200	216.3	218	330	22	–	–	–	–	2	262	290	12	23	M20	7.46	13.9	–
(225)	241.8	243.7	350	22	–	–	–	–	2	282	310	12	23	M20	7.70	15.8	–
250	267.4	269.5	400	24	36	288	292	6	2	324	355	12	25	M22	11.8	22.6	12.7
300	318.5	321	445	24	38	340	346	6	3	368	400	16	25	M22	12.6	27.8	13.8
350	355.6	358.1	490	26	42	380	386	6	3	413	445	16	25	M22	16.3	36.9	18.2
400	406.4	409	560	28	44	436	442	6	3	475	510	16	27	M24	23.3	52.1	25.8
450	457.2	460	620	30	48	496	502	6	3	530	565	20	27	M24	29.3	68.4	33.4
500	508	511	675	30	48	548	554	6	3	585	620	20	27	M24	33.3	81.6	38.0
(550)	558.8	562	745	32	52	604	610	6	3	640	680	20	33	M30	42.9	105	49.4
600	609.6	613	795	32	52	656	662	6	3	690	730	24	33	M30	45.4	120	52.6
(650)	660.4	664	845	34	56	706	712	6	3	740	780	24	33	M30	51.8	144	60.2
700	711.2	715	905	34	58	762	770	6	3	800	840	24	33	M30	62.5	176	70.2
(750)	762	766	970	36	62	816	824	6	3	855	900	24	33	M30	76.9	214	86.5
800	812.8	817	1020	36	64	868	876	6	3	905	950	28	33	M30	84.5	249	92.0
(850)	863.6	868	1070	36	66	920	928	6	3	955	1000	28	33	M30	–	–	98.7
900	914.4	919	1120	38	70	971	979	6	3	1005	1050	28	33	M30	–	–	110
1000	1016	1021	1235	40	74	1073	1081	6	3	1110	1160	28	39	M36	–	–	133
*(1100)	1117.6	1123	1345	42	76	–	–	–	3	1220	1270	28	39	M36	–	–	–
*1200	1219.2	1225	1465	44	78	–	–	–	3	1325	1380	32	39	M36	–	–	–
*1350	1371.6	–	1630	48	82	–	–	–	3	1480	1540	36	45	M42	–	–	–
*1500	1524.0	–	1795	50	90	–	–	–	3	1635	1700	40	45	M42	–	–	–

1、Flanges of parenthesized nominal diameter had letter not be used.
2、The facing of flanges shall conform to KS B 1509 (JIS B 2202) 1984.
3、Nominal diameter over 1000 is manufacturer' s standard (*)

沧州傲森迪克管件制造有限公司

CANGZHOU AUTHENTIC PIPE-FITTING MANUFACTURING CO.,LTD.

技术参数

Technical parameters

GOST 12820-80 PN1.6

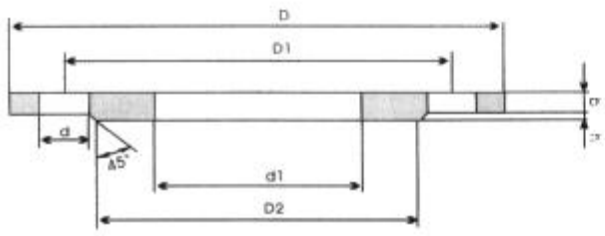

Unit:mm

Nomenclature	Dimensions, mm								Weight, kg
	D	D_1	D_2	D_1	b	h	n	d	
P_{nom}=1.6MPa(16kgf/cm²)									
1-10-16	90	60	42	15	12	2	4	14	0.54
1-15-16	95	65	47	19	12	2	4	14	0.61
1-20-16	105	75	58	26	14	2	4	14	0.86
1-25-16	115	85	68	33	16	2	4	14	1.17
1-32-16	135	100	78	39	16	2	4	18	1.58
1-40-16	145	110	88	46	17	3	4	18	1.96
1-50-16	160	125	102	59	19	3	4	18	2.58
1-65-16	180	145	122	78	21	3	4	18	3.42
1-80-16	195	160	133	91	21	3	4	18	3.71
1-100-16	215	180	158	110	23	3	8	18	4.73
1-125-16	245	210	184	135	25	3	8	18	6.38
1-150-16	280	240	212	161	25	3	8	22	7.81
1-175-16	310	270	242	196	25	3	8	22	8.64
1-200-16	335	295	268	222	27	3	12	22	10.1
1-225-16	365	325	295	245	27	3	12	22	11.7
1-250-16	405	355	320	273	28	3	12	26	14.49
1-300-16	460	410	370	325	28	4	12	26	17.78
1-350-16	520	470	430	377	30	4	16	26	22.88
1-400-16	580	525	482	426	34	4	16	30	31
1-450-16	640	585	532	480	38	4	20	30	39.64
1-500-16	710	650	585	530	44	4	20	33	57.01
1-600-16	840	770	685	630	45	5	20	39	80.03
1-700-16	910	840	800	720	47	5	24	39	84.21
1-800-16	1020	950	905	820	49	5	24	39	104.41
1-900-16	1120	1050	1005	920	54	5	28	39	128.6
1-1000-16	1255	1170	1110	1020	58	5	28	45	179.37
1-1200-16	1485	1390	1330	1220	71	5	32	52	297.78

GOST 12820-80 PN2.5

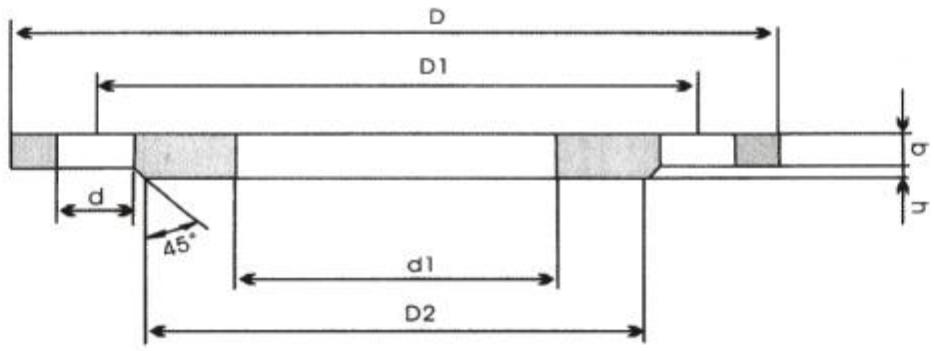

Unit:mm

Nomenclature	Dimensions, mm								Weight, kg
	D	D_1	D_2	d_1	b	h	n	d	
P_{nom} 2.5MPa(25kgf/cm²)									
1-10-25	90	60	42	15	14	2	4	14	0.63
1-15-25	95	65	47	19	14	2	4	14	0.7
1-20-25	105	75	58	26	16	2	4	14	0.98
1-25-25	115	85	68	33	16	2	4	14	1.17
1-32-25	135	100	78	39	18	2	4	18	1.77
1-40-25	145	110	88	46	19	3	4	18	2.18
1-50-25	160	125	102	59	21	3	4	18	2.71
1-65-25	180	145	122	78	21	3	8	18	3.22
1-80-25	195	160	133	91	23	3	8	18	4.06
1-100-25	230	190	158	110	25	3	8	22	5.92
1-125-25	270	220	184	135	27	3	8	26	8.26
1-150-25	300	250	212	161	27	3	8	26	10.12
1-200-25	360	310	278	222	29	3	12	26	13.34
1-250-25	425	370	335	273	31	3	12	30	18.9
1-300-25	485	430	390	325	32	4	16	30	23.95
1-350-25	550	490	450	377	38	4	16	33	34.35
1-400-25	610	550	505	426	40	4	16	33	44.62
1-500-25	730	660	615	530	48	4	20	39	67.3
1-600-25	840	770	720	630	49	5	20	39	90.87
1-800-25	1075	990	930	820	63	5	24	45	181.43